# Polo 1995 ➤

| Motronic inj. and ignition system (2-valve, roller rocker finger) | | | | | | | | | |
|---|---|---|---|---|---|---|---|---|---|
| Engine ID | AKK | AKP | ALD | AUC | AUD | | | | |

Edition 10.1999

satelettronica

Protected by copyright. Copying for private or commercial purposes, in part or in whole, is not permitted unless authorised by Volkswagen AG. Volkswagen AG does not guarantee or accept any liability with respect to the correctness of information in this document. Copyright by Volkswagen AG.

# List of Workshop Manual Repair GroupsList of Workshop Manual Repair GroupsList of Workshop Manual Repair Groups

## Polo 1995 ➤

## Motronic inj. and ignition system (2-valve, roller rocker finger)

### Repair Group

01 - Self-diagnosis

24 - Mixture preparation, Injection

28 - Ignition system

Protected by copyright. Copying for private or commercial purposes, in part or in whole, is not permitted unless authorised by Volkswagen AG. Volkswagen AG does not guarantee or accept any liability with respect to the correctness of information in this document. Copyright by Volkswagen AG.

satelettronica

Technical information should always be available to the foremen and mechanics, because their careful and constant adherence to the instructions is essential to ensure vehicle road-worthiness and safety. In addition, the normal basic safety precautions for working on motor vehicles must, as a matter of course, be observed.

All rights reserved.
No reproduction without prior agreement from publisher.

Copyright © 2010 Volkswagen AG, Wolfsburg

# Contents

**01 - Self-diagnosis . . . 1**

**1 General to self-diagnosis . . . 1**
1.1 General to self-diagnosis . . . 1
1.2 Features of self-diagnosis . . . 1
1.3 Technical data of self-diagnosis . . . 1
1.4 Significance of EPC warning lamp (fault lamp for electronic accelerator) in dash panel insert . . . 3
1.5 Connecting fault reader V.A.G 1551 and selecting engine electronics control unit . . . 4
1.6 Connecting vehicle diagnosis, testing and information system VAS 5051 and selecting engine control unit . . . 6

**2 Fault memory . . . 9**
2.1 Fault memory . . . 9
2.2 Interrogating and erasing fault memory of engine control unit . . . 9
2.3 Automatic test sequence . . . 10

**3 Fault table: SAE P0 codes . . . 11**
3.1 Fault table: SAE P0 codes . . . 11

**4 Fault table: SAE P1 codes . . . 14**
4.1 Fault table: SAE P1 codes . . . 14

**5 Final control diagnosis . . . 22**
5.1 Final control diagnosis . . . 22
5.2 Performing final control diagnosis . . . 22

**6 Readiness code . . . 25**
6.1 Readiness code . . . 25
6.2 Function . . . 25
6.3 Reading readiness code . . . 25
6.4 Generating readiness code . . . 26

**7 Measured value blocks . . . 33**
7.1 Measured value blocks . . . 33
7.2 Safety precautions . . . 33
7.3 Read measured value block . . . 33

**8 Evaluating measured value blocks, display groups 0...9 -Basic functions- . . . 34**
8.1 Evaluating measured value blocks, display groups 0...9 -Basic functions- . . . 34

**9 Evaluating measured value blocks, display groups 10...29 -Ignition- . . . 38**
9.1 Evaluating measured value blocks, display groups 10...29 -Ignition- . . . 38

**10 Evaluating measured value blocks, display grps 30...49, 99 -Lambda regulation- . . . 42**
10.1 Evaluating measured value blocks, display grps 30...49, 99 -Lambda regulation- . . . 42

**11 Evaluating measured value blocks, display groups 50...69 -Speed regulation- . . . 47**
11.1 Evaluating measured value blocks, display groups 50...69 -Speed regulation- . . . 47

**12 Evaluating measured value blocks, display groups 70...79 -Reducing emissions- . . . 50**
12.1 Evaluating measured value blocks, display groups 70...79 -Reducing emissions- . . . 50

**13 Evaluating measured value blocks, display group 100 -Readiness code- . . . 51**
13.1 Evaluating measured value blocks, display group 100 -Readiness code- . . . 51

**24 - Mixture preparation, Injection . . . 53**

**1 Servicing injection system . . . 53**
1.1 Servicing injection system . . . 53
1.2 Fitting locations overview . . . 53
1.3 General notes on injection . . . 57
1.4 Removing and installing parts of the injection system . . . 59
1.5 Dismantling and assembling intake manifold . . . 68
1.6 Dismantling and assembling fuel rail with injectors . . . 71
1.7 Dismantling and assembling air cleaner . . . 74

Volkswagen AG does not guarantee or accept any liability with respect to the correctness of information in this document. Copyright by Volkswagen AG. Reproduced by satelettronica. Copyright private or commercial purposes, in part or in whole, is not permitted unless authorised by Volkswagen AG.
satelettronica

1.8 Safety precautions . . . 78
1.9 Rules for cleanliness . . . 79
1.10 Technical data . . . 79

**2 Checking components . . . 80**
2.1 Checking components . . . 80
2.2 Checking Lambda probe heating before catalyst . . . 80
2.3 Checking Lambda probe heating after catalyst . . . 84
2.4 Checking throttle valve control part . . . 87
2.5 Checking intake manifold pressure sender . . . 91
2.6 Checking intake air temperature sender . . . 92
2.7 Checking coolant temperature sender . . . 96
2.8 Checking engine speed sender . . . 101
2.9 Checking injectors . . . 103
2.10 Checking fuel pressure regulator and holding pressure . . . 109
2.11 Checking intake air system for leaks (unmetered air) . . . 113
2.12 Checking intake air preheating . . . 114
2.13 Checking vacuum valve . . . 114

**3 Checking functions . . . 116**
3.1 Checking functions . . . 116
3.2 Idling check . . . 116
3.3 Checking Lambda probe and Lambda regulation before catalyst . . . 118
3.4 Checking Lambda probe and Lambda regulation after catalyst . . . 123
3.5 Checking ageing of Lambda probe before catalyst . . . 127
3.6 Checking engine operating mode . . . 128

**4 Engine control unit . . . 130**
4.1 Engine control unit . . . 130
4.2 Checking control unit voltage supply . . . 130
4.3 Procedure after voltage supply open circuit . . . 132
4.4 Replacing engine control unit . . . 133
4.5 Coding engine control unit . . . 134
4.6 Coding variations of engine control unit . . . 135
4.7 Erasing learnt values and adapting engine control unit to throttle valve control part and exhaust gas recirculation valve . . . 135
4.8 Adapting engine control unit to electronic immobilizer . . . 137

**5 Checking additional signals . . . 137**
5.1 Checking additional signals . . . 137
5.2 Checking speed signal . . . 137
5.3 Checking signal from/to air conditioning system . . . 139
5.4 Checking signal from brake light switch and brake pedal switch . . . 140
5.5 Checking rpm signal . . . 143
5.6 Checking signal from power steering pressure switch . . . 143
5.7 Checking data bus . . . 145

**28 - Ignition system . . . 147**

**1 Servicing ignition system . . . 147**
1.1 Servicing ignition system . . . 147
1.2 General notes on ignition system . . . 147
1.3 Removing and installing parts of the ignition system . . . 148
1.4 Safety precautions . . . 151
1.5 Test data, spark plugs . . . 151
1.6 Checking Hall sender . . . 152
1.7 Checking ignition transformer . . . 154
1.8 Checking knock sensor . . . 157
1.9 Check misfiring recognition . . . 159

Copyright by Volkswagen AG. Volkswagen AG does not guarantee or accept any liability with respect to the correctness of information in this document. Copying for private or commercial purposes, in part or in whole, is not permitted unless authorised by Volkswagen AG.
satelettronica

# 01 - Self-diagnosis

## 1 - General to self-diagnosis

### 1.1 - General to self-diagnosis

### 1.2 - Features of self-diagnosis

The engine control unit (Motronic control unit J220) is equipped with a fault memory.

If faults occur in the sensors and components being monitored, they will be stored in the fault memory together with an indication of the type of fault.

After evaluating the information, the engine control unit decides among different faults => Fault table page 14 and stores these until the contents of the fault memory is erased.

Faults which only occur sporadically will have the addendum "sporadic fault" on the print out. These faults will be indicated on the display by the addendum "/SP". The cause of sporadic faults can be e.g. a loose contact or a brief open circuit. If a sporadic fault does not occur again within 40 warm-up phases (engine start below 50° C coolant temperature - switched off above 72° C), it will be erased from the fault memory.

The faults stored can be read-out with the fault reader V.A.G 1551, the vehicle system tester V.A.G 1552 or the new tester VAS 5051 => Page 9 .

The fault memory must be erased after the faults have been rectified => Page 9 .

All values learnt by the engine control unit will be erased when the engine control unit connector is pulled off or the battery is disconnected. However the contents of the fault memory are retained. When the engine is subsequently started the idling could be rough for a brief period. In this case leave the engine running for a few minutes at idling speed or perform a longer test drive, until the learning process is completed.
Procedure after voltage supply open circuit =>Page 132 .

***Note:***

*General information for self-diagnosis can be found in the instruction manuals for the fault reader V.A.G 1551, vehicle system tester V.A.G 1552 or the new tester VAS 5051.*

### 1.3 - Technical data of self-diagnosis

#### Control unit identification

The control unit version is displayed when the fault reader V.A.G 1551, the vehicle system tester V.A.G 1552 or the new tester VAS 5051 is connected and engine electronics control unit selected => Page 4 .

#### Equipment

| Engine codes | AKK | AKP | ALD |
|---|---|---|---|
| System designation | Motronic ME7.5.10 | Motronic ME7.5.10 | Motronic ME7.5.10 |
| Exhaust emissions fulfil | MVEG II standard | EU 4 standard | MVEG II standard |
| EPC system | yes | yes | yes |
| Self-diagnosis | yes | yes | yes |

satelettronica

| Engine codes | AKK | AKP | ALD |
|---|---|---|---|
| Final control diagnosis | yes | yes | yes |
| Operating mode of data transfer to V.A.G 1551/1552 | rapid data transfer | rapid data transfer | rapid data transfer |
| Fault memory | non-volatile memory1) | non-volatile memory1) | non-volatile memory1) |
| Memory for learnt values | volatile memory2) | volatile memory2) | volatile memory2) |
| Lambda regulation | 1 probe | 2 probes | 1 probe |
| Knock control | 1 knock sensor | 1 knock sensor | 1 knock sensor |

1) Independent of voltage supply.

2) Values are erased when voltage supply is interrupted.

| Engine code | AKK | AKP | ALD |
|---|---|---|---|
| Twin path intake manifold | no | no | no |
| Variable valve timing | no | no | no |
| Charge pressure control | no | no | no |
| Secondary air system | no | no | no |
| Exhaust gas recirculation | no | no | no |

| Engine codes | AUC | AUD |
|---|---|---|
| System designation | Motronic ME7.5.10 | Motronic ME7.5.10 |
| Exhaust emissions fulfil | EU 4 standard | EU 4 standard |
| EPC System | yes | yes |
| Self-diagnosis | yes | yes |
| Final control diagnosis | yes | yes |
| Operating mode of data transfer to V.A.G 1551/5052 | rapid data transfer | rapid data transfer |
| Fault memory | non-volatile memory1) | non-volatile memory1) |
| Memory for learnt values | volatile memory2) | volatile memory2) |
| Lambda regulation | 2 probes | 2 probes |
| Knock control | 1 knock sensor | 1 knock sensor |

1) Independent of voltage supply.

2) Values are erased when voltage supply is interrupted.

| Engine codes | AUC | AUD |
|---|---|---|
| Twin path intake manifold | no | no |
| Variable valve timing | no | no |
| Charge pressure control | no | no |
| Secondary air system | no | no |
| Exhaust gas recirculation | yes | no |

**Functions which can be selected when using the fault readers V.A.G 1551/1552 or VAS 5051**

*The prerequisites to select the desired functions can be found in the following table.*

Protected by copyright. Copying for private or commercial purposes, in part or in whole, is not permitted unless authorised by Volkswagen AG. Volkswagen AG does not guarantee or accept any liability with respect to the correctness of information in this document. Copyright by Volkswagen AG.

satelettronica

| Function | | Prerequisite | | |
|---|---|---|---|---|
| Functions on V.A.G 1551/1552 or on VAS 5051 | | Engine stationary, ignition switched on | Engine running at idling speed | Vehicle being driven |
| 01 | Interrogate control unit version | yes | yes | yes |
| 02 | Interrogate fault memory | yes1) | yes | yes |
| 03 | Final control diagnosis | yes | no | no |
| 04 | Basic setting2) | yes | yes | yes |
| 05 | Erase fault memory | yes | yes | yes |
| 06 | End output | yes | yes | yes |
| 07 | Code control unit | no | no | no |
| 08 | Read measured value block | yes | yes | yes |
| 10 | Adaption | no | no | no |
| 15 | Read readiness code3) | yes | yes | yes |

1) Only carry out with ignition switched on, when engine does not start (operate starter for at least 6 seconds first).

2) Must be carried out after the following: Replacing engine control unit, throttle valve control part, engine or disconnecting battery.

3) Only for engines fulfilling EU 4 standard (Engine codes AKP, AUC, AUD)

## 1.4 - Significance of EPC warning lamp (fault lamp for electronic accelerator) in dash panel insert

"EPC" is the abbreviation for Electronic Power Control.

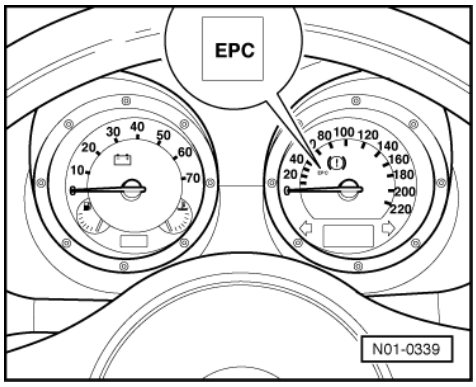


-> Fitting location of EPC warning lamp

When the ignition is switched on the engine control unit checks all components which are important for the correct functioning of the electronic power control.

The engine control unit will switch the EPC lamp on for about 1 second whilst the components are being checked. If a fault is detected during the check the lamp will be permanently switched on.

satelettronica

If faults are recognised in electronic accelerator system when the engine is running, the engine control unit will switch on the EPC lamp (these faults are marked in the fault table). Simultaneously an entry is made in the engine control unit fault memory.

## 1.5 - Connecting fault reader V.A.G 1551 and selecting engine electronics control unit

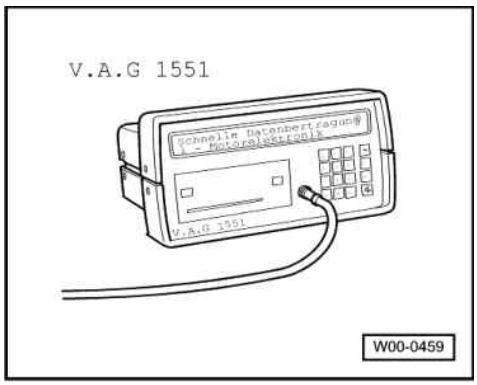


**Special tools, workshop equipment, testers, measuring instruments and auxiliary items required**

- -> V.A.G 1551 Fault reader

***Note:***

*The vehicle system tester V.A.G 1552 can be used instead of the fault reader V.A.G 1551, however a print-out is not possible.*

*All functions of V.A.G 1551/1552 can also be carried out with the new tester V.A.S 5051. Connecting VAS 5051 =>Page 6 .*

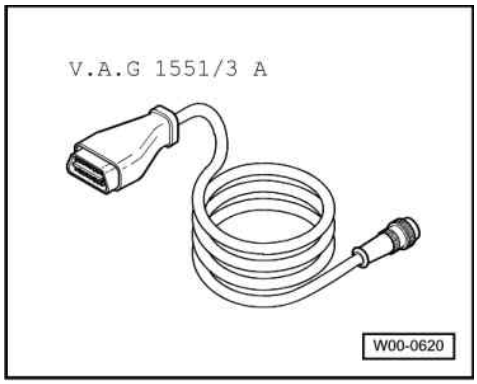


- -> V.A.G 1551/3A Cable

**Test conditions**

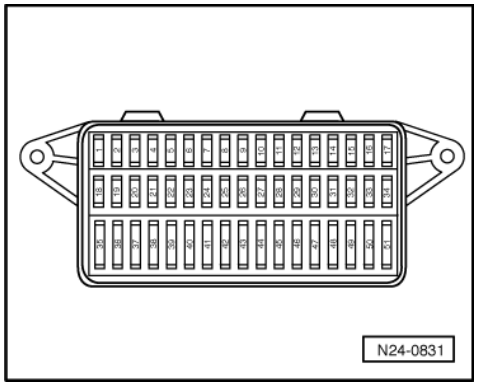


Protected by copyright. Copying for private or commercial purposes, in part or in whole, is not permitted unless authorised by Volkswagen AG. Volkswagen AG does not guarantee or accept any liability with respect to the correctness of information in this document. Copyright by Volkswagen AG.
satelettronica

- -> The fuses No. 1, 3, 15, 24, 30, 31, 34, 36 and 40 must be OK.
- Earth connection between engine (on gearbox bell housing) and body (below battery) OK.
- Earth connection in plenum chamber OK.
- The battery voltage must be at least 11.5 V.
- If the vehicle is equipped with an air conditioning system, this must be switched off.
- All electrical consumers, e.g. lights and rear window heating must be switched off.

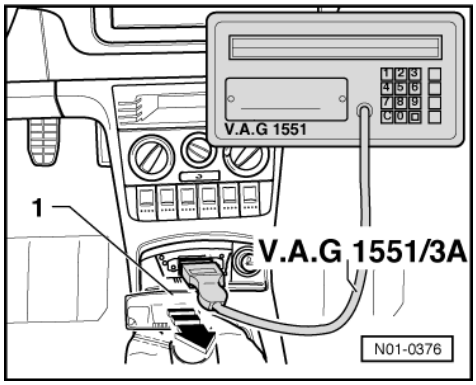


Work sequence

- -> Pull cover -1- off in direction of arrow.
- Connect fault reader V.A.G 1551 or vehicle system tester V.A.G 1552 with cable V.A.G 1551/3A.

After the fault reader has been connected:

- Depending upon desired function:
  Switch ignition on
  or
  Start engine => Page 2 , Table "Selectable functions".

*Notes:*

- If the display remains blank, check voltage supply for diagnostic connection according to fault finding programme:

=> Current flow diagrams, Electrical fault finding and Fitting locations

- If the display does not indicate as described in the work sequence:

=> Fault reader operating instructions

- If due to an input fault "Fault in the data transfer!" is displayed, pull wire off fault reader, reconnect and repeat work step.

- Operate fault reader taking into account the information on the display:

-> Indicated on display:

```
V.A.G - SELF DIAGNOSIS     HELP
     1 - Rapid data transfer*
     2 - Flash code output*
```

* Appears alternately

- Operate fault reader taking into account the information on the display:
- Press key 1 for "Rapid data transfer".
- Press keys 0 and 1 for address word "Engine electronics" and confirm entry with Q key.

-> The control unit identification and the coding will appear on the display, e.g.:

```
030906032G
```

Protected by copyright. Copying for private or commercial purposes, in part or in whole, is not permitted unless authorised by Volkswagen AG. Volkswagen AG does not guarantee or accept any liability with respect to the correctness of information in this document. Copyright by Volkswagen AG.
satelettronica

- 030906032G = Part No. of control unit (for up-to-date control unit version see parts film)
- ME 7.5.10 = System designation and version
- 2921 = Program level number
- Coding XXXXX = Control unit coding
- WSC xxxxx = Workshop code from V.A.G 1551, of the workshop who carried out the last coding. (If the factory coding has not been changed, WSC 00000 appears)

***Note:***
*Replace control unit if the control version displayed does not correspond to the vehicle*
*=> Page 133 .*
*An incorrectly coded engine control unit leads to:*
- Engine running faults (gear change jerks, load change jerks, etc.)
- Increased fuel consumption
- Increased exhaust gas emissions
- Faults stored in fault memory which are not actually present
- Functions will not be performed (Lambda regulation, activation of the activated charcoal filter system, etc.).

- Press ⇒key.

-> Indicated on display:

```
Rapid data transfer      HELP
Select function XXX
```

- Further measures see repair procedures.

## 1.6 - Connecting vehicle diagnosis, testing and information system VAS 5051 and selecting engine control unit

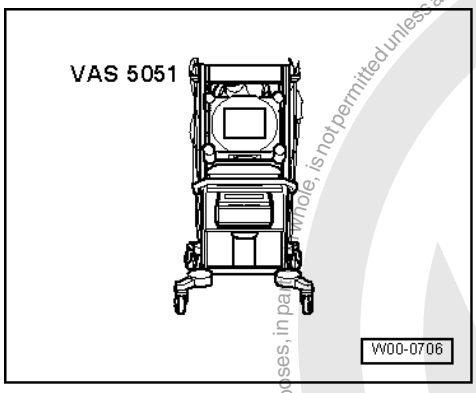


All the functions that were previously possible with the V.A.G 1551/1552 can be performed with the new tester VAS 5051 in operating mode Vehicle self-diagnosis:
=> Operating instructions for Vehicle Diagnosis, Testing and Information System VAS 5051.
**Special tools, workshop equipment, testers, measuring instruments and auxiliary items required**
- -> VAS 5051 Vehicle Diagnosis, Testing and Information System

**Test conditions**

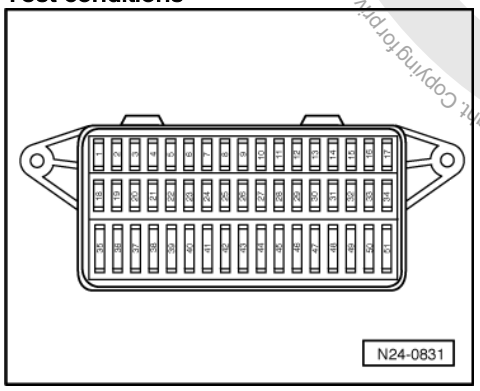


Protected by copyright. Copying for private or commercial purposes, in part or whole, is not permitted unless authorised by Volkswagen AG. Volkswagen AG does not guarantee or accept any liability with respect to the correctness of information in this document. Copyright by Volkswagen AG.
satelettronica

- -> The fuses No. 1, 3, 15, 24, 30, 31, 34, 36 and 40 must be OK.
- Earth connection between engine (on gearbox bell housing) and body (below battery) OK.
- Earth connection in plenum chamber OK.
- The battery voltage must be at least 11.5 V.

- If the vehicle is equipped with an air conditioning system, this must be switched off.
- All electrical consumers, e.g. lights and rear window heating must be switched off.

Work sequence

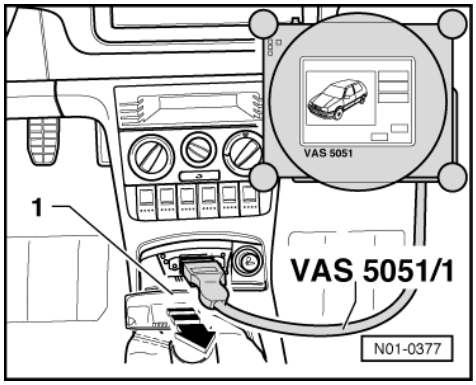


- -> Pull cover -1- off in direction of arrow.
- Connect tester VAS 5051 with diagnosis cable VAS 5051/1 or VAS 5051/3 as follows:
- Fit diagnosis cable connector onto diagnosis connector.
- Depending upon desired function:
  Switch ignition on
  or
  Start engine => Page 2 , Table "Selectable functions".

*Note:*

- The display fields will be displayed from top to bottom in functions 04 - Basic settings or 08 - Read data block.
- If the display does not indicate as described in the work sequence:

=> Operating instructions for Vehicle Diagnosis, Testing and Information System VAS 5051.

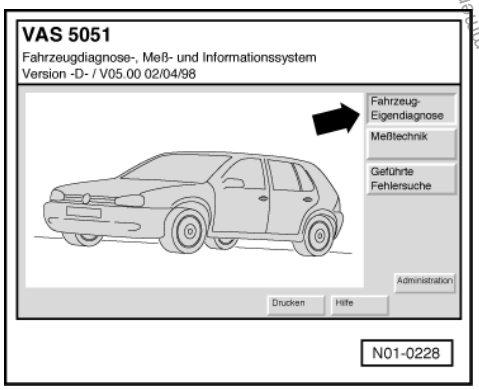


-> Indicated on display:

Selecting operating mode:

- Press the button on the display for "Vehicle self-diagnosis" -arrow-.

Protected by copyright. Copying for private or commercial purposes, in part or in whole, is not permitted unless authorised by Volkswagen AG. Volkswagen AG does not guarantee or accept any liability with respect to the correctness of information in this document. Copyright by Volkswagen AG.
satelettronica

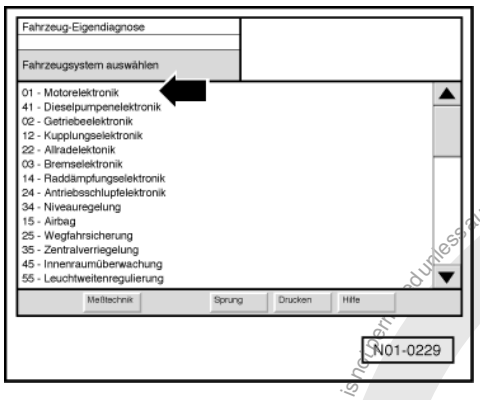


-> Indicated on display:

**Selecting vehicle system:**

- Press "01 - Engine electronics" on display -arrow-.

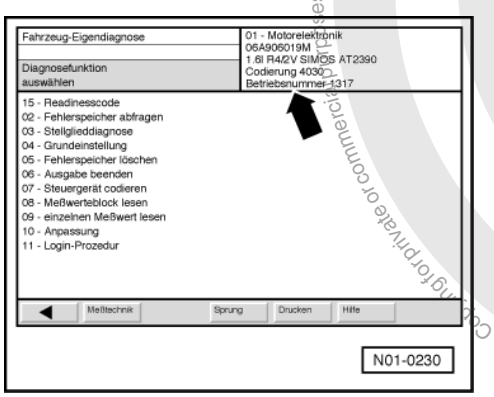


-> The control unit identification and coding -arrow- is shown on display e.g.:

***Note:***

*Replace control unit if the control version displayed does not correspond to the vehicle*

*=> Page 133 .*

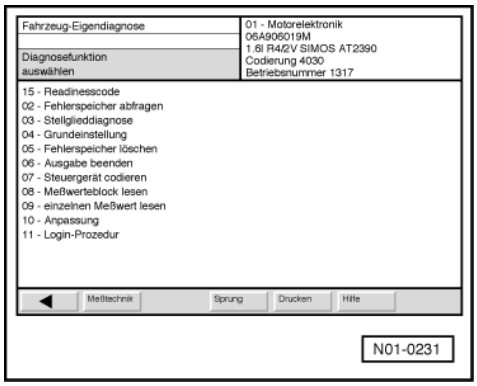


-> Indicated on display:

Protected by copyright. Copying for private or commercial purposes, part or in whole, is not permitted unless authorised by Volkswagen AG. Volkswagen AG does not guarantee or accept any liability with respect to the correctness of information in this document. Copyright by Volkswagen AG.
satelettronica

**Selecting diagnosis function:**

At this point all diagnosis functions are available.

- Press desired function on display.
- Further measures see repair procedures.

# 2 - Fault memory

## 2.1 - Fault memory

Interrogate fault memory of all control units
=> Page 10 , Automatic test sequence

## 2.2 - Interrogating and erasing fault memory of engine control unit

**Special tools, workshop equipment, testers, measuring instruments and auxiliary items required**

- Fault reader V.A.G 1551 or vehicle system tester V.A.G 1552 with cable V.A.G 1551/3A

**Work sequence**

***Note:***

*All functions which could previously be performed with V.A.G 1551/1552 can also be performed with the new tester VAS 5051.*

- Connect fault reader V.A.G 1551 (V.A.G 1552). Start engine and select "Address word" 01 of engine control unit. When doing this the engine must be running at idling speed.
  (Connecting fault reader and selecting engine control unit => Page 4 .)

*Only when engine does not start:*

- Operate starter for approx. 6 seconds and then do not switch off the ignition.

- Switch on fault reader printer with the print key. The warning lamp in key must light up.

-> Indicated on display:

```
Rapid data transfer      HELP
Select function XX
```

- Operate fault reader taking into account the information on the display:
- Press keys 0 and 2 for function "Interrogate fault memory" and confirm entry with Q key.

-> The number of faults stored or "No fault recognised!" will be shown on the display:

```
X Faults recognised!
```

*If no fault is stored:*

- Press ⇒key.

If one or more faults are stored:

The stored faults will be displayed and printed out one after the other.

-> After the stored faults have been printed out, the display will show:

Protected by copyright. Copyright by Volkswagen AG. Volkswagen AG does not guarantee or accept any liability with respect to the correctness of information in this document. Copyright by Volkswagen AG. Not permitted unless authorised by Volkswagen AG. Not for private or commercial purposes, in part or in whole, is not permitted unless authorised by Volkswagen AG.
satelettronica

```
Rapid data transfer      HELP
Select function XX
```

- Press keys 0 and 5 for the function "Erase fault memory" and confirm entry with Q key.

-> Indicated on display:

```
Rapid data transfer
Fault memory is erased!
```

***Note:***

*If the ignition is switched off between "Interrogate fault memory" and "Erase fault memory" the fault memory will not be erased.*

- Press ⇒key.

-> Indicated on display:

```
Rapid data transfer      HELP
Select function XX
```

- Press keys 0 and 6 for the function "End output" and confirm entry with the Q key.

-> Indicated on display:

```
Rapid data transfer      HELP
Enter address word XX
```

- Switch off ignition.
- Rectify faults printed out using fault table:
  SAE P0 codes=> Page 14

**Only engines which conform to EU 4 standard (engine code AKP, AUC, AUD)**

- Read readiness code=> Page 26 .

## 2.3 - Automatic test sequence

During test and assembly work faults can be recognised from other control units like e.g. plug disconnected. Therefore, on completion, the fault memories of all control units must be interrogated and erased. To do this:

- Press key 0 twice for address word "Automatic test sequence" and confirm entry with Q key. The V.A.G 1551 transmits all known address words one after the other.

When a control unit answers with its identification the number of stored faults appears on the display or "No fault recognised".

Any system faults that are stored will be displayed one after the other and printed out. The V.A.G 1551 will then transmit the next address word.

-> The automatic test sequence has ended when following is indicated on display:

```
Rapid data transfer      HELP
Enter address word XX
```

- Erase all fault memories and then carry out a road test.

Observe the valid safety measures during a test drive => Page 33 .

During the road test the following operating conditions must be fulfilled:
- The coolant temperature must exceed 80 °C .
- When the temperature is reached, the operating conditions
  Idling
  Part throttle

Protected by copyright. Copying for private or commercial purposes, in part or in whole, is not permitted unless authorised by Volkswagen AG. Volkswagen AG does not guarantee or accept any liability with respect to the correctness of information in this document. Copyright by Volkswagen AG.
satelettronica

Full throttle
Overrun
must be attained several times.
- At full throttle the speed must exceed 3500 rpm.

- Again interrogate the fault memories of all control units using the "automatic test sequence".

**If no fault is stored:**

- Press the ⇒key.
- Press keys 0 and 6 for the function "End output" and confirm entry with the Q key.
- Switch off ignition.

# 3 - Fault table: SAE P0 codes

## 3.1 - Fault table: SAE P0 codes

***Notes:***

- The fault code overview is listed according to SAE or V.A.G code.
- Electronic accelerator "EPC" relevant faults are indicated additionally by the electronic accelerator warning lamp ("EPC warning lamp") in dash panel insert.
- Explanation of the fault types (e.g. "open circuit/short circuit to earth"):

=> Fault reader operating instructions

- If components are indicated as faulty:
  First check the wiring and connectors to these components as well as the system earth connections according to current flow diagram. This is particularly relevant if faults are output as "occurring sporadically" (SP).
- Erase fault memory after rectifying fault =>Page 9 .

***V.A.G 1551 print out, e.g.:***

*16497 P0113 035*

*Intake air temperature sender -G42*

*Signal too large*

*Sporadic fault*

***Explanation:***

- 16497 = Fault code
- P0113 = Additional fault code (only for USA at present and disregard)
- 035 = Fault type as a number
- Intake air temperature sender -G42 = Faulty current path or incorrect location
- Signal too large = Fault type as text
- Sporadic faults = Faults that are not always present e.g. loose contact

| Fault code | | Fault text | Fault elimination |
|---|---|---|---|
| SAE | V.A.G | | |
| P0106 | 16490 | Intake manifold pressure/air pressure => -G71/-F96implausible signal | - Check intake manifold pressure sender =>Page 91 |
| P0107 | 16491 | Intake manifold pressure/air pressure => -G71/-F96signal too low | |
| P0108 | 16492 | Intake manifold pressure/air pressure => -G71/-F96signal too high | |

satelettronica

| Fault code | | Fault text | Fault elimination |
|---|---|---|---|
| P0112 | 16496 | Intake air temperature sender -G42 signal too high | - Check intake air temperature sender => Page 92 |
| P0113 | 16497 | Intake air temperature sender -G42 signal too high | |
| P0116 | 16500 | Coolant temperature sender -G62 implausible signal | - Check coolant temperature sender => Page 96<br>- Check thermostat:<br>=> Repair group 19; Removing and installing parts of cooling system; Parts of cooling system, engine-side Parts of cooling system, engine-side |
| P0117 | 16501 | Coolant temperature sender -G62 signal too low | |
| P0118 | 16502 | Coolant temperature sender -G62 signal too high | |

| Fault code | | Fault text | Fault elimination |
|---|---|---|---|
| SAE | V.A.G | | |
| P0130 | 16514 | Bank 1 probe 1 electrical fault in current circuit | - Check Lambda probe heating before catalyst => Page 80 |
| P0132 | 16516 | Bank 1 probe 1 voltage too high | - Check Lambda probe and Lambda regulation before catalyst=> Page 118<br>- Check Lambda probe heating before catalyst => Page 80 |
| P0133 | 16517 | Bank 1 probe 1 signal too slow | |
| P0134 | 16518 | Bank 1 probe 1 no activity | |
| P0135 | 16519 | Bank 1 probe 1 heating current circuit electrical fault | |
| P0136 | 16520 | Bank 1 probe 2 electrical fault in current circuit | - Check Lambda probe and Lambda regulation after catalyst<br>=> Page 123<br>- Check Lambda probe heating after catalyst => Page 84 |
| P0137 | 16521 | Bank 1 probe 2 voltage too low | |
| P0138 | 16522 | Bank 1 probe 2 voltage too high | |
| P0139 | 16523 | Bank 1 probe 2 signal too slow | |
| P0140 | 16524 | Bank 1 probe 2 no activity | |
| P0141 | 16525 | Bank 1 probe 2 heating current circuit electrical fault | |

| Fault code | | Fault text | Fault elimination |
|---|---|---|---|
| SAE | V.A.G | | |
| P0170 | 16554 | Bank 1, fuel measuring system faulty | - Check fuel pressure regulator and holding pressure => Page 109 |
| | | | - Check injectors<br>=>Page 103 |
| | | | - Check fuel pump:<br>=> Repair group 20; Removing and installing parts of fuel system; Check fuel pump Check fuel pump |
| | | | - Check intake system for leaks => Page 113 |
| | | | - Check vacuum pipes for leaks |

| Fault code | | Fault text | Fault elimination |
|---|---|---|---|
| SAE | V.A.G | | |
| P0171 | 16555 | Bank 1, fuel measuring system, system too lean | - Check fuel pressure regulator and holding pressure =>Page 109 |

satelettronica
Volkswagen AG. Volkswagen AG does not guarantee or accept any liability with respect to the correctness of information in this document. Copyright by Volkswagen AG. Protected by copyright. Copying for private or commercial purposes, in part or in whole, is not permitted unless authorised by Volkswagen AG.

| | | | |
|---|---|---|---|
| | | | - Check injectors =>Page 103 |
| | | | - Check fuel pump: => Repair group 20; Removing and installing parts of fuel system; Check fuel pump Check fuel pump |
| | | | - Check intake system for leaks => Page 113 |
| | | | - Check vacuum pipes for leaks |

| Fault code | | Fault text | Fault elimination |
|---|---|---|---|
| SAE | V.A.G | | |
| P0172 | 16556 | Bank 1, fuel measuring system, system too rich | - Check fuel pressure regulator and holding pressure => Page 109 |
| | | | - Check injectors =>Page 103 |
| | | | - Check tank venting valve => Page 22 , final control diagnosis |

| Fault code | | Fault text | Fault elimination |
|---|---|---|---|
| SAE | V.A.G | | |
| P0300 | 16684 | Misfiring recognised | - Check injectors=>Page 103 |
| P0301 | 16685 | Cyl. 1 Misfiring recognised | - Check ignition cables and spark plugs => Page 147 |
| P0302 | 16686 | Cyl. 2 misfiring recognised | - Check ignition transformer => Page 154 |
| P0303 | 16687 | Cyl. 3 misfiring recognised | - Check misfiring detection => Page 159 |
| P0304 | 16688 | Cyl. 4 misfiring recognised | |

| Fault code | | Fault text | Fault elimination |
|---|---|---|---|
| SAE | V.A.G | | |
| P0321 | 16705 | Engine speed sender -G28 implausible signal | - Check engine speed sender =>Page 101 |
| P0322 | 16706 | Engine speed sender -G28 no signal | |
| P0327 | 16711 | Knock sensor 1 -G61 signal too low | - Check knock sensor => Page 157 |
| P0328 | 16712 | Knock sensor 1 -G61 signal too high | |
| P0341 | 16725 | Camshaft pos.-sensor, sender -G40 implausible signal | - Check Hall sender =>Page 152 |
| P0342 | 16726 | Camshaft pos.-sensor sender -G40 signal too low | |
| P0343 | 16727 | Camshaft pos.-sensor sender -G40 signal too high | |

| Fault code | | Fault text | Fault elimination |
|---|---|---|---|
| SAE | V.A.G | | |
| P0401 | 16785 | Exhaust gas recirculation system, flow rate too low | - Check EGR valve (electrical) => Repair group 26; Exhaust gas recirculation system |
| P0420 | 16804 | Bank 1 catalyst system, efficiency too low | |
| P0422 | 16806 | Bank 1 main catalyst, efficiency too low | - Check catalyst: => Repair group 26; Removing and installing parts of exhaust system; Checking catalyst Checking catalyst |

Protected by copyright. Copying for private or commercial purposes, in part or in whole, is not permitted unless authorised by Volkswagen AG. Volkswagen AG does not guarantee or accept any liability with respect to the correctness of information in this document. Copyright by Volkswagen AG.
satelettronica

| Fault code | | Fault text | Fault elimination |
|---|---|---|---|
| P0441 | 16825 | Tank breathing system, flow rate faulty | - Check tank venting valve => Page 22 , Final control diagnosis Check hoses and connecting pipes from fuel tank to throttle valve control part: => Repair group 20; Activated charcoal filter system; Checking activated charcoal filter system for leaks Checking activated charcoal filter system for leaks |

| Fault code | | Fault text | Fault elimination |
|---|---|---|---|
| SAE | V.A.G | | |
| P0501 | 16885 | Vehicle speed signal implausible | - Check speed signal => Page 137 |
| P0506 | 16890 | Idling speed control, Revs below specification | - Check idling speed control => Page 116 , Idling check |
| P0507 | 16891 | Idling speed control, Revs above specification | |
| P0532 | 16916 | A/C pressure sensor, Signal too low | - Check high pressure sender -G65- => Heating, Air conditioning => Repair group 87 |
| P0533 | 16917 | A/C pressure sensor, Signal too high | |
| P0560 | 16944 | Voltage supply signal implausible | - Check voltage supply => Page 130 |
| P0562 | 16946 | Voltage supply too low | - Procedure after interrupting voltage supply => Page 132 |
| P0563 | 16947 | Voltage supply too high | |

| Fault code | | Fault text | Fault elimination |
|---|---|---|---|
| SAE | V.A.G | | |
| P0571 | 16955 | Brake light switch -F1)implausible signal | - Check brake light switch and brake pedal switch => Page 140 |
| P0600 | 16984 | Drive train data bus, message missing | - Check data bus => Page 145 |
| P0601 | 16985 | Control unit defective | - Replace engine control unit => Page 133 |
| P0604 | 16988 | Control unit defective | |
| P0605 | 16989 | Control unit defective | |
| P0606 | 16990 | Control unit defective | |

1) The system monitors both brake light switch -F and brake pedal switch -F47.

# 4 - Fault table: SAE P1 codes

## 4.1 - Fault table: SAE P1 codes

*Notes:*

- The fault code overview is listed according to SAE or V.A.G code.
- Erase fault memory after rectifying fault =>Page 9 .

| Fault code | | Fault text | Fault elimination |
|---|---|---|---|
| SAE | V.A.G | | |

Protected by copyright. Copying for private or commercial purposes, in part or in whole, is not permitted unless authorised by Volkswagen AG. Volkswagen AG does not guarantee or accept any liability with respect to the correctness of information in this document. Copyright by Volkswagen AG.
satelettronica

| | | | |
|---|---|---|---|
| P1102 | 17510 | Bank 1, probe 1 heating element circuit, short to positive | - Check Lambda probe heating before catalyst => Page 80 |
| P1105 | 17513 | Bank 1, probe 2 heating element circuit short to positive | - Check Lambda probe heating after catalyst => Page 84 |
| P1115 | 17523 | Bank 1, probe 1 heating current circuit short to earth | - Check Lambda probe heating before catalyst => Page 80 |
| P1116 | 17524 | Bank 1, probe 1 heating element circuit, open circuit | |

| Fault code | | Fault text | Fault elimination |
|---|---|---|---|
| SAE | V.A.G | | |
| P1117 | 17525 | Bank 1, probe 2 heating element circuit short to earth | - Check Lambda probe heating after catalyst => Page 84 |
| P1118 | 17526 | Bank 1, probe 2 heating element circuit open circuit | |
| P1127 | 17535 | Bank 1, mixture adaption (mult.) system too rich | - Check fuel pressure regulator and holding pressure => Page 109 |
| | | | - Check injectors =>Page 103 |
| | | | - Check tank venting valve => Page 22 , Final control diagnosis |

| Fault code | | Fault text | Fault elimination |
|---|---|---|---|
| SAE | V.A.G | | |
| P1128 | 17536 | Bank 1 mixture adaption (mult.) system too lean | - Check fuel pressure regulator and holding pressure => Page 109 |
| | | | - Check injectors =>Page 103 |
| | | | - Check fuel pump: => Repair group 20; Removing and installing parts of fuel system; Checking fuel pump Checking fuel pump |
| | | | - Check intake system for leaks => Page 113 |
| | | | - Check exhaust system for leaks: => Repair group 26; Removing and installing parts of exhaust system |
| | | | - Check vacuum pipes for leaks |

| Fault code | | Fault text | Fault elimination |
|---|---|---|---|
| SAE | V.A.G | | |
| P1136 | 17544 | Bank 1, mixture adaption (add.) system too lean | - Check fuel pressure regulator and holding pressure => Page 109 |
| | | | - Check injectors =>Page 103 |
| | | | - Check fuel pump: => Repair group 20; Removing and installing parts of fuel system; Checking fuel pump Checking fuel pump |
| | | | - Check intake system for leaks => Page 113 |
| | | | - Check exhaust system for leaks: => Repair group 26; Removing and installing parts of exhaust system |

Protected by copyright. Copying for private or commercial purposes, in part or in whole, is not permitted unless authorised by Volkswagen AG. Volkswagen AG does not guarantee or accept any liability with respect to the correctness of information in this document. Copyright by Volkswagen AG.
satelettronica

| Fault code | | Fault text | Fault elimination |
|---|---|---|---|
| | | | - Check vacuum pipes for leaks |

*Note:*

*add. = additive means, the fault only has an effect at idling speed.*

| Fault code | | Fault text | Fault elimination |
|---|---|---|---|
| SAE | V.A.G | | |
| P1137 | 17545 | Bank 1, mixture adaption (add.) system too rich | - Check fuel pressure regulator and holding pressure => Page 109 |
| | | | - Check injectors =>Page 103 |
| | | | - Check tank venting valve => Page 22 , Final control diagnosis |
| P1142 | 17550 | Load determination, level not reached | - Check accelerator pedal position sender: => Repair group 20; Electronic power control (EPC); Checking accelerator pedal position sender Checking accelerator pedal position sender |
| P1143 | 17551 | Load determination, level exceeded | |

*Note:*

*add. = additive means, the fault only has an effect at idling speed.*

| Fault code | | Fault text | Fault elimination |
|---|---|---|---|
| SAE | V.A.G | | |
| P1165 | 17573 | Bank1, mixture adaption region 1 Rich limit exceeded1) | - Check fuel pressure regulator and holding pressure => Page 109 |
| | | | - Check injectors =>Page 103 |
| | | | - Check fuel pump: => Repair group 20; Removing and installing parts of fuel system; Check fuel pump Check fuel pump |
| | | | - Check intake system for leaks => Page 113 |
| | | | - Check exhaust system for leaks: => Repair group 26; Removing and installing parts of exhaust system |

Continued on next page

1) If this fault occurs the engine control unit switches on the EPC warning lamp in dash panel insert. Significance of EPC warning lamp => 3 .

| Fault code | | Fault text | Fault elimination |
|---|---|---|---|
| SAE | V.A.G | | |
| P1165 | 17573 | Continuation Bank1, mixture adaption region 1 Rich limit exceeded1) | Check exhaust gas recirculation system: => Repair group 26; Exhaust gas recirculation system |
| | | | - Check activated charcoal filter system for leaks: => Repair group 20; Activated charcoal filter system |
| | | | - Check Lambda probe and Lambda regulation before catalyst => Page 118 |

Copyright by Volkswagen AG. Volkswagen AG does not guarantee or accept any liability with respect to the correctness of information in this document. Copying for private or commercial purposes, in part or in whole, is not permitted unless authorised by Volkswagen AG.
satelettronica

| Fault code | | Fault text | Fault elimination |
|---|---|---|---|
| | | | - Check Lambda probe and Lambda regulation after catalyst => Page 123 |

1) If this fault occurs the engine control unit switches on the EPC warning lamp in dash panel insert. Significance of EPC warning lamp => 3 .

| Fault code | | Fault text | Fault elimination |
|---|---|---|---|
| SAE | V.A.G | | |
| P1165 | 17573 | Bank1, mixture adaption region 1 Rich limit exceeded1) | - Check fuel pressure regulator and holding pressure => Page 109 |
| | | | - Check injectors =>Page 103 |
| | | | - Check fuel pump: => Repair group 20; Removing and installing parts of fuel system; Check fuel pump Check fuel pump |
| | | | - Check intake system for leaks => Page 113 |
| | | | - Check exhaust system for leaks: => Repair group 26; Removing and installing parts of exhaust system |
| Continued on next page | | | |

1) If this fault occurs the engine control unit switches on the EPC warning lamp in dash panel insert. Significance of EPC warning lamp => 3 .

| Fault code | | Fault text | Fault elimination |
|---|---|---|---|
| SAE | V.A.G | | |
| P1166 | 17574 | Continuation Bank1, mixture adaption region 2 Rich limit exceeded1) | Check exhaust gas recirculation system: => Repair group 26; Exhaust gas recirculation system |
| | | | - Check activated charcoal filter system for leaks: => Repair group 20; Activated charcoal filter system |
| | | | - Check Lambda probe and Lambda regulation before catalyst => Page 118 |
| | | | - Check Lambda probe and Lambda regulation after catalyst => Page 123 |

1) If this fault occurs the engine control unit switches on the EPC warning lamp in dash panel insert. Significance of EPC warning lamp => 3 .

| Fault code | | Fault text | Fault elimination |
|---|---|---|---|
| SAE | V.A.G | | |
| P1171 | 17579 | Angle sender 2 for throttle valve drive -G188 implausible signal 1) | - Check throttle valve control part => Page 87 |
| P1172 | 17580 | Angle sender 2 for throttle valve drive -G188 signal too low 1) | |
| P1173 | 17581 | Angle sender 2 for throttle valve drive -G188 signal too high 1) | |

1) If this fault occurs the engine control unit switches on the EPC warning lamp in dash panel insert. Significance of EPC warning lamp => 3 .

| Fault code | Fault text | Fault elimination |
|---|---|---|

satelettronica
Copyright by Volkswagen AG. Volkswagen AG does not accept any liability in respect to the correctness of information in this document. Protected by copyright. Copying for private or commercial purposes, in part or in whole, is not permitted unless authorised by Volkswagen AG.

| SAE | V.A.G | | |
|---|---|---|---|
| P1176 | 17584 | Bank 1 Lambda correction after cat. control limit reached | - Check Lambda probe ageing before catalyst=> Page 127 |
| | | | - Check Lambda probe and Lambda regulation after catalyst => Page 123 |
| | | | - Check intake system for leaks => Page 113 |
| P1196 | 17604 | Bank 1, probe 1 heating current circuit electrical fault | - Check Lambda probe heating before catalyst => Page 80 |
| P1198 | 17606 | Bank 1, probe 2 heating current circuit electrical fault | - Check Lambda probe heating after catalyst => Page 84 |

| Fault code | | Fault text | Fault elimination |
|---|---|---|---|
| SAE | V.A.G | | |
| P1213 | 17621 | Injector Cyl. 1 -N30 short to positive | - Check injectors =>Page 103 |
| P1214 | 17622 | Injector Cyl. 2 -N31 short to positive | |
| P1215 | 17623 | Injector Cyl. 3 -N32 short to positive | |
| P1216 | 17624 | Injector Cyl. 4 -N33 short to positive | |
| P1225 | 17633 | Injector Cyl. 1 -N30 short to earth | |
| P1226 | 17634 | Injector Cyl. 2 -N31 short to earth | |
| P1227 | 17635 | Injector Cyl. 3 -N32 short to earth | |
| P1228 | 17636 | Injector Cyl. 4 -N33 short to earth | |

| Fault code | | Fault text | Fault elimination |
|---|---|---|---|
| SAE | V.A.G | | |
| P1237 | 17645 | Injector Cyl. 1 -N30 open circuit | - Check injectors =>Page 103 |
| P1238 | 17646 | Injector Cyl. 2 -N31 open circuit | |
| P1239 | 17647 | Injector Cyl. 3 -N32 open circuit | |
| P1240 | 17648 | Injector Cyl. 4 -N33 open circuit | |
| P1325 | 17733 | Cylinder 1 knock control, control limit reached | - Fill fuel tank with at least 95 RON |
| P1326 | 17734 | Cylinder 2 knock control, control limit reached | - Check knock sensor => Page 157 |
| P1327 | 17735 | Cylinder 3 knock control, control limit reached | - Eliminate cause for abnormal engine running noises |
| P1328 | 17736 | Cylinder 4 knock control, control limit reached | - Loosen knock sensor and tighten again to 20 Nm |

| Fault code | | Fault text | Fault elimination |
|---|---|---|---|
| SAE | V.A.G | | |
| P1335 | 17743 | Engine torque monitoring system 2, control limit surpassed1) | - Check intake air temperature sender => Page 92 |
| P1336 | 17744 | Engine torque monitoring system, control limit surpassed | - Check coolant temperature sender => Page 91 |
| P1340 | 17748 | Camshaft position/crankshaft position sensor wrong allocation | - Check engine speed sender =>Page 152 |
| P1341 | 17749 | Ignition output 1, short to earth | - Check ignition transformer => Page 154 |
| P1342 | 17750 | Ignition output 1, short to positive | - |
| P1343 | 17751 | Ignition output 2, short to earth | |

satelettronica

| Fault code | | Fault text | Fault elimination |
|---|---|---|---|
| P1344 | 17752 | Ignition output 2, short to positive | |
| P1348 | 17756 | Ignition output 1, open circuit | |
| P1349 | 17757 | Ignition output 2, open circuit | |

1) Engine control unit switches on the EPC warning lamp in dash panel insert with this fault. Significance of EPC warning lamp => 3 .

| Fault code | | Fault text | Fault elimination |
|---|---|---|---|
| SAE | V.A.G | | |
| P1386 | 17794 | Control unit defective | - Renew engine control unit (J220) => Page 133 |
| P1388 | 17796 | Control unit defective 1) | |
| P1400 | 17808 | Valve for exhaust gas recirculation -N18 Fault in electrical circuit | - Check valve for exhaust gas recirculation<br>=> Repair group 26; Exhaust gas recirculation system |
| P1401 | 17809 | Valve for exhaust gas recirculation -N18 Short to earth | |
| P1402 | 17810 | Valve for exhaust gas recirculation -N18 Short to positive | |
| P1403 | 17811 | Exhaust gas recirculation system control difference | |
| P1404 | 17812 | Exhaust gas recirculation system basic settings not performed | - Adapt exhaust gas recirculation valve=> Page 135 |

1) If this fault occurs the engine control unit switches on the EPC warning lamp in dash panel insert. Significance of EPC warning lamp => 3 .

| Fault code | | Fault text | Fault elimination |
|---|---|---|---|
| SAE | V.A.G | | |
| P1410 | 17818 | Tank breathing valve -N80, Short to positive | - Check tank breathing valve=> Page 22 , Final control diagnosis |
| P1415 | 17823 | Valve for exhaust gas recirculation -N18 Characteristic curve adaption, Upper limit exceeded | - Adapt exhaust gas recirculation valve=> Page 135 |
| P1416 | 17824 | Valve for exhaust gas recirculation -N18 Characteristic curve adaption, Upper limit exceeded | |
| P1425 | 17833 | Tank venting valve -N80 short to earth | - Check tank venting valve=> Page 22 , Final control diagnosis |
| P1426 | 17834 | Tank breathing valve -N80 open circuit | |
| P1442 | 17850 | Exh. gas recirc. potentiometer-G212 Signal too great | - Check valve for exhaust gas recirculation<br>=> Repair group 26; Exhaust gas recirculation system |
| P1443 | 17851 | Exh. gas recirc. potentiometer-G212 Signal too small | |
| P1444 | 17852 | Exh. gas recirc. potentiometer -G212 Implausible signal | |

| Fault code | | Fault text | Fault elimination |
|---|---|---|---|
| SAE | V.A.G | | |
| P1501 | 17909 | Fuel pump relay-J17, short to earth | - Check fuel pump relay:<br>=> Current flow diagrams, Electrical fault finding and Fitting locations binder |
| P1502 | 17910 | Fuel pump relay -J17, short to positive | |

Protected by copyright. Copying for private or commercial purposes, in part or in whole is not permitted unless authorised by Volkswagen AG. Volkswagen AG does not guarantee or accept any liability with respect to the correctness of information in this document. Copyright by Volkswagen AG.
satelettronica

| | | | |
|---|---|---|---|
| P1523 | 17931 | Crash signal from airbag control unit, Implausible signal | => Body self-diagnosis; Repair group 01; Airbag system self-diagnosis Airbag system self-diagnosis |
| P1541 | 17949 | Fuel pump relay -J17, open circuit | - Check fuel pump relay:<br>=> Current flow diagrams, Electrical fault finding and Fitting locations binder |
| P1542 | 17950 | Angle sender for throttle valve drive -G187 implausible signal1) | - Check throttle valve control part => Page 87 |
| P1543 | 17951 | Angle sender for throttle valve drive -G187 signal too low 1) | |
| P1544 | 17952 | Angle sender for throttle valve drive -G187 signal too high 1) | |
| P1545 | 17953 | Throttle valve control malfunction 1) | |
| P1558 | 17966 | Throttle valve drive -G186 electrical fault in current circuit 1) | |

1) If this fault occurs the engine control unit switches on the EPC warning lamp in dash panel insert. Significance of EPC warning lamp => 3 .

| Fault code | | Fault text | Fault elimination |
|---|---|---|---|
| SAE | V.A.G | | |
| P1559 | 17967 | Throttle valve control part -J338 fault in basic setting 1) | - Adapt engine control unit to the throttle valve control part => Page 135 |
| P1560 | 17968 | Maximum engine revs surpassed | - Repair mechanical damage |
| P1564 | 17972 | Throttle valve control part -J338 low voltage at base setting 1) | - Check battery, charge if needed<br>Adapt engine control unit to throttle valve control part => Page 135 |
| P1568 | 17976 | Throttle valve control part -J338, Mechanical fault 1) | - Check throttle valve control part => Page 87 |

1) If this fault occurs the engine control unit switches on the EPC warning lamp in dash panel insert. Significance of EPC warning lamp => 3 .

| Fault code | | Fault text | Fault elimination |
|---|---|---|---|
| SAE | V.A.G | | |
| P1570 | 17978 | Engine control unit blocked | - Adapt engine control unit (J220) to immobilizer => Page 137 |
| P1579 | 17987 | Throttle valve control part -J338 Adaption not started1) | - Adapt engine control unit to throttle valve control part => Page 135 |
| P1602 | 18010 | Voltage supply terminal 30 voltage too low | |
| P1603 | 18011 | Control unit defective | - Renew engine control unit (J220) => Page 133 |
| P1610 | 18018 | Control unit defective | |
| P1612 | 18020 | Engine control unit incorrectly coded | - Code engine control unit<br>=> Page 134 |
| P1626 | 18034 | Drive train data bus no messages from gearbox control unit | - Check data bus => Page 145 |

| Fault code | | Fault text | Fault elimination |
|---|---|---|---|
| SAE | V.A.G | | |
| P1630 | 18038 | Accelerator pedal position sender -G79 signal too low 1) | - Check accelerator pedal position sender:<br>=> Repair group 20; Electronic power control (EPC); Check accelerator pedal position sender Check accelerator pedal position sender |

Protected by copyright. Copyright by Volkswagen AG.
Volkswagen AG does not guarantee or accept any liability with respect to the correctness of information in this document. Copying for private or commercial purposes, in whole or in part, is not permitted unless authorised by Volkswagen AG.
satelettronica

| Fault code | | Fault text | Fault elimination |
|---|---|---|---|
| P1631 | 18039 | Accelerator pedal position sender -G79 signal too high 1) | |
| P1633 | 18041 | Accelerator pedal position sender 2 -G185 signal too low 1) | |
| P1634 | 18042 | Accelerator pedal position sender 2 -G185 signal too high 1) | |
| P1639 | 18047 | Accelerator pedal position senders 1/2 -G79 +G185 implausible signal 1) | |

1) If this fault occurs the engine control unit switches on the EPC warning lamp in dash panel insert. Significance of EPC warning lamp => 3 .

| Fault code | | Fault text | Fault elimination |
|---|---|---|---|
| SAE | V.A.G | | |
| P1640 | 18048 | Control unit defective | - Renew engine control unit (J220) => Page 133 |
| P1648 | 18056 | Drive train data bus defective | - Check data bus => Page 145 |
| P1649 | 18057 | Drive train data bus no messages from ABS control unit | |
| P1650 | 18058 | Drive train data bus no message from combi-instrument | |

| Fault code | | Fault text | Fault elimination |
|---|---|---|---|
| SAE | V.A.G | | |
| P1677 | 18085 | Electr. throttle control fault lamp - K132 Short to positive 1) | - Check fault lamp: => Repair group 20; Electronic power control (EPC); Checking EPC fault lamp Checking EPC fault lamp |
| P1678 | 18086 | Electr. throttle control fault lamp -K132 Short to earth 1) | |
| P1679 | 18087 | Electr. throttle control fault lamp -K132 Open circuit 1) | |
| P1691 | 18099 | Warning lamp for self-diagnosis -K83 Open circuit | - Check fault lamp: => Current flow diagrams, Electrical fault finding and Fitting locations binder |
| P1692 | 18100 | Warning lamp for self-diagnosis -K83 Short to earth | |
| P1693 | 18101 | Warning lamp for self-diagnosis -K83 Short to positive | |

1) If this fault occurs the engine control unit switches on the EPC warning lamp in dash panel insert. Significance of EPC warning lamp => 3 .

Protected by copyright. Copyright by Volkswagen AG. Volkswagen AG does not guarantee or accept any liability with respect to the correctness of information in this document. Copying for private or commercial purposes, in part or in whole, is not permitted unless authorised by Volkswagen AG.
satelettronica

# 5 - Final control diagnosis

## 5.1 - Final control diagnosis

## 5.2 - Performing final control diagnosis

The final control diagnosis activates the following components in the stated sequence:

1. Tank venting valve (N80)

**Special tools, workshop equipment, testers, measuring instruments and auxiliary items required**

- Fault reader V.A.G 1551 or vehicle system tester V.A.G 1552 with cable V.A.G 1551/3A
- Test box V.A.G 1598/22
- Hand multimeter V.A.G 1526 or multimeter V.A.G 1715
- Diode test lamp V.A.G 1527
- Adapter set V.A.G 1594
- Current flow diagram

**Check conditions**

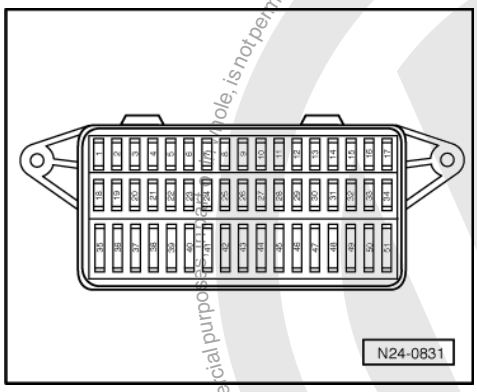


- -> The fuses 1, 31 and 36 must be OK.
- The battery voltage must be at least 11.5 V.
- All electrical consumers, e.g. lights and rear window heating must be switched off.
- If the vehicle is equipped with an air conditioning system, this must be switched off.

***Notes:***

- The final control diagnosis can only be carried out if the engine is stationary and ignition switched on.
- The final control diagnosis will be broken off if the engine is started or a rotational impulse is recognised.
- If the final control diagnosis is not terminated by pressing the ⇒key, the tank venting valve will be activated for approx. 60 seconds during the final control diagnosis.
- The final control is checked acoustically or by touch.
- The electric fuel pump will run during the complete final control diagnosis.

- The final control diagnosis will be aborted after 10 minutes.
- If the final control diagnosis is to be repeated, the engine must be started briefly beforehand.

**Work sequence**

- Connect the fault reader V.A.G 1551 (V.A.G 1552). Then switch ignition on and select engine control unit with the "Address word" 01.
  (Connecting fault reader and selecting engine control unit => Page 4 .)

-> Indicated on display:

satelettronica

```
Rapid data transfer      HELP
Select function XX
```

- Operate fault reader taking into account the information on the display:
- Press keys 0 and 3 for the function "Final control diagnosis".

-> Indicated on display:

```
Rapid data transfer      Q
03 Final control diagnosis
```

**Activate tank venting valve (N80) for activated charcoal filter:**

- Confirm input with Q key.

-> Indicated on display:

```
Final control diagnosis
Tank venting valve-N80
```

The tank venting valve must click, until the final control diagnosis is terminated by pressing ⇒key.

If valve clicks:

- Press ⇒key.

-> Indicated on display:

```
Final control diagnosis
END
```

- Press ⇒key.

-> Indicated on display:

```
Rapid data transfer      HELP
Select function XX
```

- Press keys 0 and 6 for the "End output" function and confirm input with the Q key.
- Switch off ignition.

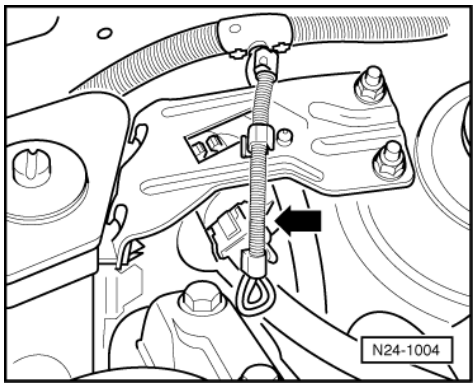


If the valve does not click:

- -> Pull 2-pin connector off tank venting valve (N80) -arrow-.

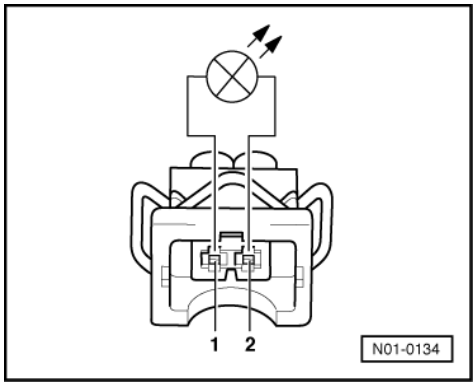


Protected by copyright. Copying for private or commercial purposes, in part or in whole, is not permitted unless authorised by Volkswagen AG. Volkswagen AG does not guarantee or accept any liability with respect to the correctness of information in this document. Copyright by Volkswagen AG.
satelettronica

- -> Connect diode test lamp V.A.G 1527 using adapter cables from V.A.G 1594 to detached connector.
  The LED must flash (bright/darker)

LED flashes:

- Proceed with final control diagnosis until completed.
- Switch off ignition.
- Renew tank venting valve (N80):

=> Repair group 20; Activated charcoal filter system; Removing and installing parts of activated charcoal filter system Activated charcoal filter system Removing and installing parts of activated charcoal filter system

- Interrogate fault memory, if necessary, repair any faults and then erase fault memory => Page 9 , interrogating and erasing fault memory.

LED does not flash:

- Proceed with final control diagnosis until completed.
- Switch off ignition.

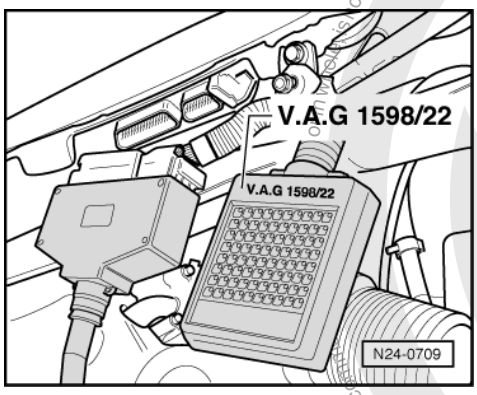


- Remove wiper arms and cowl panel:

=> Electrical system; Repair group 92; windscreen wiper system; removing and installing windscreen wiper system windscreen wiper system removing and installing windscreen wiper system

- -> Connect test box V.A.G 1598/22 to control unit wiring harness.

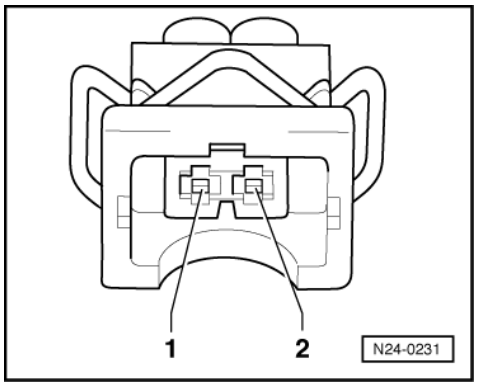


- -> Check wire between test box socket 14+2-pin connector contact 2 for open circuit using current flow diagram.
  Wire resistance: max. 1.5 ω
- Additionally check wire for short to battery positive and earth.
  Specification: ∞ω
- Check wire between 2 pin connector contact 1 and the fuel pump relay (J17) for open circuit using current flow diagram.
  Wire resistance: max. 1.5 ω

Protected by copyright. Copyright by Volkswagen AG.
Copyright by Volkswagen AG. Volkswagen AG does not guarantee or accept any liability with respect to the correctness of information in this document. Copying or distribution is not permitted unless authorised by Volkswagen AG.
satelettronica

If no wiring fault is detected:

- Replace engine control unit
  => Page 133 .

# 6 - Readiness code

## 6.1 - Readiness code

**Only engines which conform to EU 4 standard (engine code AKP, AUC, AUD)**

## 6.2 - Function

The readiness code is an 8-digit number code which displays the status of the emission relevant diagnosis.

When the diagnosis for a system (e.g. catalyst), has been successfully completed, the corresponding position in the number code will change from 1 to 0.

The diagnosis is performed at regular intervals during normal driving. It is recommended that the readiness code be generated after performing repairs on an emission relevant system, to guarantee that these systems function correctly. If a fault is detected during the diagnosis it will be entered in the fault memory.

Each time the fault memory is erased or the voltage supply is interrupted the readiness code will be erased.

## 6.3 - Reading readiness code

**Special tools, workshop equipment, testers, measuring instruments and auxiliary items required**

- Fault reader V.A.G 1551 or vehicle system tester V.A.G 1552 with cable V.A.G 1551/3A

**Work sequence**

- Connect the fault reader V.A.G 1551 (V.A.G 1552). Then switch ignition on and select engine control unit with the "Address word" 01.
  (Connecting fault reader and selecting engine control unit => Page 4 .)

-> Indicated on display:

```
Rapid data transfer      HELP
Select function XXX
```

- Press keys 1 and 5 for the "Readiness code" function and confirm entry with Q key.

Must appear on display when all diagnosis functions have been successfully completed:

-> Indicated on display:

```
Readiness code
00000000 - Test complete
```

- Press ⇒key.
- Press keys 0 and 6 for the "End output" function and confirm input with the Q key.

- Switch off ignition.

-> Indicated on display:

Protected by copyright. Copyright by Volkswagen AG. Copyright by Volkswagen AG. Copyright. Copying for private or commercial purposes, in part or in whole, is not permitted unless authorised by Volkswagen AG. Volkswagen AG does not guarantee or accept any liability with respect to the correctness of information in this document.
satelettronica

```
Readiness code
00101101 - Test not complete
```

One of the diagnostic checks has not run through successfully:

- Press ⇒key.
- Generate readiness code => Page 26 .

**Significance of figures in 8-digit number block for readiness code**

| The readiness code is generated only when all display zones show 0 | | | | | | | | |
|---|---|---|---|---|---|---|---|---|
| 1 | 2 | 3 | 4 | 5 | 6 | 7 | 8 | Diagnostic function |
| | | | | | | | 0 | Catalyst |
| | | | | | | 0 | | Catalyst heating (currently no diagnosis/always "0") |
| | | | | | 0 | | | Activated charcoal filter system (tank venting system) |
| | | | | 0 | | | | Secondary air system (not fitted/always "0") |
| | | | 0 | | | | | Air conditioner (currently no diagnosis/always "0") |
| | | 0 | | | | | | Lambda probes |
| | 0 | | | | | | | Lambda probe heating |
| 0 | | | | | | | | Exhaust gas recirculation |

## 6.4 - Generating readiness code

**Special tools, workshop equipment, testers, measuring instruments and auxiliary items required**

- Fault reader V.A.G 1551 or vehicle system tester V.A.G 1552 with cable V.A.G 1551/3A

**Test conditions**

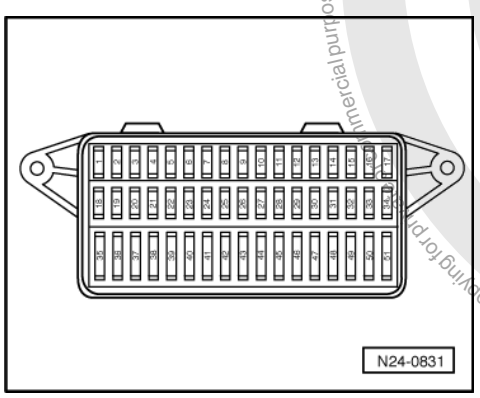


- -> Fuse No. 1 must be OK.
- Vehicle stationary
- All electrical consumers, e.g. lights and rear window heating must be switched off.
- If the vehicle is equipped with an air conditioning system, this must be switched off.
- Exhaust system between catalyst and cylinder head must be free of leaks
- Coolant temperature must be at least 80 °C, =>display group 04, display zone 3.
- Intake air temperature less than 60°C
  =>display group 04, display zone 4

**Work sequence**

- Connect the fault reader V.A.G 1551 (V.A.G 1552). Then switch ignition on and select engine control unit with the "Address word" 01.

Protected by copyright. Copying for private or commercial purposes, in part or in whole, is not permitted unless authorised by Volkswagen AG. Volkswagen AG does not guarantee or accept any liability with respect to the correctness of information in this document. Copyright by Volkswagen AG.
satelettronica

(Connecting fault reader and selecting engine control unit => Page 4 .)

**Work step 1: Interrogate fault memory**

-> Indicated on display:

```
Rapid data transfer      HELP
Select function XXX
```

- Press keys 0 and 2 for function "Interrogate fault memory" and confirm entry with Q key.

-> The number of faults stored or "No fault recognised!" will be shown on the display.

```
X Faults recognised!
```

If a fault is stored:

- Rectify faults printed out using fault table:
  SAE P0 codes=> Page 14

If no fault is stored:

- Press ⇒key.

**Work step 2: Erase fault memory**

-> Indicated on display:

```
Rapid data transfer      HELP
Select function XXX
```

- Press keys 0 and 5 for the function "Erase fault memory" and confirm entry with Q key.

***Note:***

*The readiness code is reset or erased each time fault memory is erased.*

-> Indicated on display:

```
Rapid data transfer
Fault memory is erased!
```

***Note:***

*If the ignition is switched off between "Interrogate fault memory" and "Erase fault memory" the fault memory will not be erased.*

- Press ⇒key.

**Work step 3: Matching the throttle valve control part to the engine control unit**

-> Indicated on display:

```
Rapid data transfer      HELP
Select function XXX
```

- Press keys 0 and 4 for the function "Initiating basic settings" and confirm entry with Q key.

-> Indicated on display:

```
Basic setting
Input display group number XXX
```

- Press keys 0, 6 and 0 for the "Display group number 60" and confirm entry with Q key.

-> Indicated on display:

Protected by copyright. Copyright by Volkswagen AG. Volkswagen AG does not guarantee or accept any liability with respect to the correctness of information in this document. Copyright by Volkswagen AG. Reproduction, in whole or in part, is not permitted unless authorised by Volkswagen AG. Volkswagen AG does not guarantee or accept any liability with respect to the correctness of information in this document. Copyright by Volkswagen AG.
satelettronica

(1...4 = Display zones)

```
System in basic setting     60
     xxx %     xxx %     x     ADP. runs
```

- Check specifications in display zones 3 and 4:
  Display zone 3: 0...9
  Display zone 4: ADP. runs, ADP. OK

-> Indicated on display:
(1...4 = Display zones)

```
System in basic setting 60
     xxx %     xxx %     9     ADP. OK
```

- Terminate engine basic setting at earliest after 30 seconds by pressing the⇒ key.

If the display does not indicate as described:

- Check throttle valve control part
  => Page 87 .

If the display indicates as described:

- Start engine and run at idling speed.

**Work step 4: Activated charcoal filter system diagnosis (tank breathing system)**

***Note:***

◆ During the work sequence the engine must not be switched off.

-> Indicated on display:

```
Rapid data transfer     HELP
Select function XXX
```

- Press keys 0 and 4 for the "Introduce basic setting" function and confirm entry with Q key.

-> Indicated on display:

```
Basic setting
Input display group number XXX
```

- Press keys 0, 7 and 0 for "Display group number 70" and confirm entry with Q key.

-> Indicated on display:
(1...4 = Display zones)

```
System in basic setting     70
     1     2     3     4
```

***Note:***

*The engine must not be loaded during this diagnosis because the diagnosis will be interrupted and will not be started again until the engine is revved-up.*

When the diagnosis is initiated by the engine control unit the display in display zone 4 jumps from "Test OFF" to "Test ON"

- Run engine at idling speed until the
  specification "TVV OK"
  is displayed in display zone 4.

If the display does not indicate as described:

- Interrogate fault memory => Page 9

Protected by copyright. Copying for private or commercial purposes, in part or in whole, is not permitted unless authorised by Volkswagen AG. Volkswagen AG does not guarantee or accept any liability with respect to the correctness of information in this document. Copyright by Volkswagen AG.
satelettronica

If the display indicates as described:

- Press C key.

**Work step 5: Lambda regulation system diagnosis**

-> Indicated on display:

```
Basic setting
Input display group number XXX
```

- Press keys 0, 3 and 7 for "Display group number 37" and confirm entry with Q key.

-> Indicated on display:
(1...4 = Display zones)

```
Read measured value block     37
     1     2     3     4
```

- Depress brake pedal.

  The engine speed is increased by the control unit to approx. 1100...1300 rpm.

- Allow the engine to continue running at increased idling speed until the specification "Syst. OK" is displayed in display zone 4.

If the display does not indicate as described:

- Interrogate fault memory => Page 9 .

If the display indicates as described:

- Press ⇒key.

  The engine speed decreases to idling speed.

**Work step 6: Lambda probe ageing diagnosis**

-> Indicated on display:

```
Rapid data transfer      HELP
Select function XXX
```

- Press keys 0 and 8 for the function "Read measured value block" and confirm entry with Q key.

-> Indicated on display:

```
Read measured value block
Input display group number XXX
```

- Press keys 0, 3 and 0 for the "Display group number 30" and confirm entry with Q key.

-> Indicated on display:
(1...2 = Display zones)

```
Read measured value block 30
     1     2
```

- Check Lambda control status before catalyst (display zone 1):
  Specification: 1 1 1
  (Significance => Page 42 )
- Check Lambda control status after catalyst (display zone 2):
  Specification: 1 1 1
  (Significance => Page 42 )

Protected by copyright. Copyright by Volkswagen AG. Volkswagen AG does not guarantee or accept any liability with respect to the correctness of information in this document. Copyright by Volkswagen AG. Protected by copyright. Copyright by Volkswagen AG. Private communication purposes, in part or in whole, is not permitted unless authorised by Volkswagen AG.
satelettronica

*Notes:*

- The first position of the 3 digit number block fluctuates between 0 and 1 (Lambda probe heating on and off).
- Depending upon the status of the Lambda control the 3 digit number block can show 0 or 1.
- The bits in display zones 1 and 2 will not be set to 1 until the catalyst temperature has risen to above 400.0 °C (=> display group 34, display zone 2).

If the specifications are not obtained:

- Interrogate fault memory => Page 9 .

If the specifications are obtained:

- Press ⇒key.

-> Indicated on display:

```
Rapid data transfer      HELP
Select function XXX
```

- Press keys 0 and 4 for the "Introduce basic setting" function and confirm entry with Q key.

-> Indicated on display:

```
Basic setting
Input display group number XXX
```

- Press keys 0, 3 and 4 for "Display group number 34" and confirm entry with Q key.

-> Indicated on display:
(1...4 = Display zones)

```
System in basic setting      34
     1     2     3     4
```

- Depress brake pedal.

  The engine speed is increased by the control unit to approx. 1100...1300 rpm.

- Maintain the engine speed until the display in display zone 4 jumps from "Test OFF" to "Test ON". The catalyst temperature in display zone 2 must be min. 400 °C.

*Note:*

*This process can take a few minutes.*

- Check amplitude duration in display zone 3:
  Specification: 0.7... 2.00
- Continue to maintain engine speed until the specification "B1-P1" appears in display zone 4.

If the display does not indicate as described:

- Interrogate fault memory => Page 9 .

If the display indicates as described:

- Press C key.

  The engine speed decreases to idling speed.

-> Indicated on display:

```
Basic setting
Input display group number XXX
```

Protected by copyright. Copying or publication without the express authorisation of Volkswagen AG. Volkswagen AG does not guarantee or accept any liability with respect to the correctness of information in this document. Copyright by Volkswagen AG.
satelettronica

- Press keys 0, 3 and 6 for "Display group number 36" and confirm entry with Q key.

-> Indicated on display:
(1...4 = Display zones)

```
System in basic setting     36
     1     2     3     4
```

- Depress brake pedal.

  The engine speed is increased by the control unit to
  approx. 1100...1300 rpm.

- Maintain the engine speed until the display
  in display zone 4 jumps from "Test OFF" to "Test ON". The catalyst temperature in display zone 2 must be min. 400 °C.

***Note:***

*This process can take a few minutes.*

- Check amplitude duration in display zone 3:
  Specification: 0.7... 2.00
- Continue to maintain engine speed until the specification "B1-P2 OK" appears in display zone 4.

If the display does not indicate as described:

- Interrogate fault memory => Page 9 .

If the display indicates as described:

- Press C key.

  The engine speed decreases to idling speed.

**Work step 7: Catalyst diagnosis**

***Note:***

*The diagnosis will only be terminated if the Lambda probe ageing diagnosis is first successfully completed.*

-> Indicated on display:

```
Basic setting
Input display group number XXX
```

- Press keys 0, 4 and 6 for "Display group number 46" and confirm entry with Q key.

-> Indicated on display:
(1...4 = Display zones)

```
System in basic setting     46
     1     2     3     4
```

- Depress brake pedal.

  The engine speed is increased by the engine control unit to
  approx. 1100...1300 rpm.

- Maintain the engine speed until the display
  in display zone 4 jumps from "Test OFF" to "Test ON". The catalyst temperature in display zone 2 must be min. 400 °C.

- Check the amplitude ratio in display zone 3:
  Specification: max. 0.50
- Continue to maintain the speed until the specification "Cat B1 OK" appears in

Protected by copyright. Copying for private or commercial purposes, in part or in whole is not permitted unless authorised by Volkswagen AG. Volkswagen AG does not guarantee or accept any liability with respect to the correctness of information in this document. Copyright by Volkswagen AG.
satelettronica

display zone 4.

If the display does not indicate as described:

- Interrogate fault memory => Page 9 .

If the display indicates as described:

- Press ⇒key.

  The engine speed decreases to idling speed.

**Work step 8: Exhaust gas recirculation diagnosis**

-> Indicated on display:

```
Rapid data transfer      HELP
Select function XXX
```

- Press keys 0 and 8 for the function "Read measured value block" and confirm entry with Q key.

-> Indicated on display:

```
Read measured value block
Input display group number XXX
```

- Press keys 0, 7 and 5 for the "Display group number 75" and confirm entry with Q key.

-> Indicated on display:
(1...4 = Display zones)

```
Read measured value block    75
     1     2     3     4
```

- Drive a short distance (about 3 ... 4 min).

  The engine speed must be raised to
  about 1800 ... 3600 rpm
  and the coolant temperature must be
  >70 °C .

- Take foot quickly from accelerator pedal to simulate over-run.

  The display in display zone 4 jumps
  from"Test OFF" to "Test ON".
  The over-run period must be about 8 seconds.

- Check that display zone 4 shows the specification
  "Syst. OK".

If the display does not indicate as described:

- Interrogate fault memory => Page 9 .

If the display indicates as described:

- Press ⇒key.
- Read readiness code=> Page 25

Protected by copyright. Copyright by Volkswagen AG. Volkswagen AG does not guarantee or accept any liability with respect to the correctness of information in this document. Copyright by Volkswagen AG. Copying for private or commercial purposes, in part or in whole, is not permitted unless authorised by Volkswagen AG.
satelettronica

# 7 - Measured value blocks

## 7.1 - Measured value blocks

## 7.2 - Safety precautions

Observe following if test and measuring instruments are required during a test drive:

- Test and measuring instruments must be secured to rear seat and operated by a 2nd person from this location.

  If test and measuring instruments are operated from front passenger's seat and the vehicle is involved in an accident, there is a possibility that the person sitting in this seat may receive serious injuries when the airbag is triggered.

## 7.3 - Read measured value block

The measured values in the functions read measured value block and basic setting are described during the individual component test. This table serves only as an overview.

**Special tools, workshop equipment, testers, measuring instruments and auxiliary items required**

- Fault reader V.A.G 1551 or vehicle system tester V.A.G 1552 with cable V.A.G 1551/3A

**Test conditions**

- All electrical consumers, e.g. lights and rear window heating must be switched off
- If the vehicle is equipped with an air conditioning system, this must be switched off.
- No faults must be stored in fault memory
  => Page 9 , interrogating fault memory
- Coolant temperature must be at least 80 °C, =>display group 04, display zone 3.

**Work sequence**

- Connect fault reader V.A.G 1551 (V.A.G 1552). Start engine and select "Address word" 01 of engine control unit. When doing this the engine must be running at idling speed.
  (Connecting fault reader and selecting engine control unit => Page 4 .)

-> Indicated on display:

```
Rapid data transfer      HELP
Select function XXX
```

- Press keys 0 and 8 for the function "Read measured value block" and confirm entry with Q key.

-> Indicated on display:

```
Read measured value block
Input display group number XXX
```

- Select required display group number.

***Note:***

*The display group number 1 is an example, to illustrate the sequence.*

- Press keys 0, 0 and 1 for "Display group number 1" and confirm entry with Q key.

-> Indicated on display:

Protected by copyright. Copyright by Volkswagen AG. Copying for private or commercial purposes, in part or in whole, is not permitted unless authorised by Volkswagen AG. Volkswagen AG does not guarantee or accept any liability with respect to the correctness of information in this document.
satelettronica

(1...4 = Display zones)

```
Read measured value block     1
     1     2     3     4
```

*Note:*

*To change to another display group proceed as follows:*

| Display group | V.A.G 1551 | V.A.G 1552 |
|---|---|---|
| Higher | Press key 3 | Press ↑key |
| Lower | Press key 1 | Press ↓key |
| Skip | Press key C | Press key C |

- If the specifications in all display zones are obtained, press ⇒key.

-> Indicated on display:

```
Rapid data transfer      HELP
Select function XXX
```

- Press keys 0 and 6 for the "End output" function and confirm input with the Q key.
- Switch off ignition.

*Note:*

*Measured value blocks which are not described in this chapter are currently only intended for the research and development and production. The values displayed are not relevant for service department fault finding.*

# 8 - Evaluating measured value blocks, display groups 0...9 -Basic functions-

## 8.1 - Evaluating measured value blocks, display groups 0...9 -Basic functions-

| Display group 1 -Basic functions- | | | | | | |
|---|---|---|---|---|---|---|
| ▪ Engine running at idling speed | | | | | | |
| Read measured value block 1 ⇒ | | | | ◂ Indicated on display | | |
| xxxx rpm | xx.x °C | xx.x % | xxxxxxxx | | | |
| 1 | 2 | 3 | 4 | ◂ Display zones | Specification | Evaluation |
| | | | | Adjustment conditions for basic setting | 1x111111 | => Page 35 |
| | | | Lambda regulator before catalyst | | -10.0...10.0 % | => Page 44 |
| | | Coolant temperature | | | 80.0...110.0 °C | => Page 37 |
| | Engine speed (idling speed) | | | | 600...800 rpm | => Page 34 |

**Evaluating display group 1, display zone 1 - Engine speed (idling speed)**

| Appears on display | Possible fault cause | Fault elimination |
|---|---|---|
| Less than specification | - Throttle valve control part sticking or defective | - Check throttle valve control part => Page 87<br>- Perform idling check => Page 116 |
| Greater than specification | - Throttle valve control part sticking or defective | - Interrogate fault memory, => Page 9 |

satelettronica

| | | |
|---|---|---|
| | | - Check throttle valve control part => Page 87<br>- Perform idling check => Page 116 |

**Significance of figures in 8-digit number block, display zone 4 - adjustment conditions**

| Significance if display = 1 | | | | | | | | |
|---|---|---|---|---|---|---|---|---|
| 1 | 2 | 3 | 4 | 5 | 6 | 7 | 8 | Significance |
| | | | | | | | 1 | Coolant temperature exceeds 80.0 °C |
| | | | | | | 1 | | Speed below 2000 rpm |
| | | | | | 1 | | | Throttle valve closed |
| | | | | 1 | | | | Lambda regulation OK. |
| | | | 1 | | | | | Idling recognised |
| | | 1 | | | | | | Air conditioner compressor switched off |
| | x | | | | | | | Not relevant |
| 1 | | | | | | | | No faults recognised by self-diagnosis |

| Display group 2 -Basic functions- | | | | | | |
|---|---|---|---|---|---|---|
| ▪ Engine running at idling speed | | | | | | |
| Read measured value block 2 | | | ⇒ | ◂ Indicated on display | | |
| xxxx rpm | xxx.x % | x.x ms | xxx mbar | | | |
| 1 | 2 | 3 | 4 | ◂ Display zones | Specification | Evaluation |
| | | | | Intake manifold pressure | 250...500 mbar | => Page 35 |
| | | | Injection period | | 2.0...7.0 ms | => Page 35 |
| | | Engine load | | | 15.0...30.0 % | => Page 38 |
| | Engine speed (idling speed) | | | | 600...800 rpm | => Page 34 |

**Evaluating display group 2, display zone 3 - Injection period**

| Appears on display | Possible fault cause | Fault elimination |
|---|---|---|
| Less than 2.0 ms | - Large amount of fuel from the activated charcoal filter system | - Check tank venting valve => Page 22 , Final control diagnosis |
| Larger than 7.0 ms | - Increased engine load due to electrical consumers, air conditioner, gear selected or P.A.S. on full lock | - Eliminate increased load (air conditioner, power assisted steering etc.) |

**Evaluating display group 2, display zone 4 - Intake manifold pressure**

| Appears on display | Possible fault cause | Fault elimination |
|---|---|---|
| Less than 250 mbar | - Large amount of unmetered air between intake manifold and air mass meter | - Check intake system for leaks => Page 91 |
| Larger than 500 mbar | - Increased engine load due to electrical consumers, air conditioner, gear selected or P.A.S. on full lock | - Eliminate increased load (air conditioner, power assisted steering etc.)<br>Check intake manifold pressure sender =>Page 91 |

| Display group 3 -Basic functions- |
|---|

Protected by copyright. Copyright by Volkswagen AG. Volkswagen AG does not guarantee or accept any liability with respect to the correctness of this document. Copying for private or commercial purposes, in part or in whole, is not permitted unless authorised by Volkswagen AG.
satelettronica

| ▪ Engine running at idling speed | | | | | | |
|---|---|---|---|---|---|---|
| Read measured value block 3 ⇒ | | | | ◂ Indicated on display | | |
| xxxx rpm | xxx mbar | xxx.x % | xx.x°BTDC | ◂ Display zones | Specification | Evaluation |
| 1 | 2 | 3 | 4 | Ignition angle | -5.0...10.0 ° BTDC | --- |
| | | | Throttle valve angle (Potentiometer 1 -G187) | | 0.2...5.0 % | => Page 38 |
| | | Intake manifold pressure | | | 250...500 mbar | => Page 35 |
| | Engine speed (idling speed) | | | | 600...800 rpm | => Page 34 |

*Note on display zone 3:*

*With the accelerator pedal floored the display value is approx. 100.0 %.*

| Display group 4 -Basic functions- | | | | | | |
|---|---|---|---|---|---|---|
| ▪ Engine running at idling speed | | | | | | |
| Read measured value block 4 ⇒ | | | | ◂ Indicated on display | | |
| xxxx rpm | xx.xxx V | xxx.x °C | xxx.x °C | ◂ Display zones | Specification | Evaluation |
| 1 | 2 | 3 | 4 | Intake air temperature | -30.0...120.0 °C | => Page 37 |
| | | | Coolant temperature | | 80.0...110.0 °C | => Page 37 |
| | | Engine control unit voltage supply | | | 12.000...15.000 V | => Page 36 |
| | Engine speed (idling speed) | | | | 600...800 rpm | => Page 34 |

*Note on display zone 3:*

*The engine control unit will use the intake air temperature as a replacement value for an engine start (start temperature - replacement value) as soon as there is a fault stored in the fault memory, which affects the coolant temperature sender (G62). The temperature then rises according to a model stored in the control unit. When the engine has reached normal working temperature a fixed replacement value will be displayed after a certain period. This fixed value is also dependent upon the intake air temperature.*

*Note on display zone 4:*

***The total temperature range is given as the specification. The displayed value must be above ambient temperature.***

**Evaluating display group 4, display zone 2 - Control unit voltage supply**

| Appears on display | Possible fault cause | Fault elimination |
|---|---|---|
| Less than 12.000 V | - Alternator defective, battery heavily discharged | - Check alternator and battery voltage, charge battery: => Electrical system; Repair group 27 |
| | - Battery heavily charged shortly after starting due to high charging current and current consumers | - Increase revs slightly for a few minutes and switch off current consumers |
| | - Transfer resistance in the current supply or the engine control unit earth connection | - Check engine control unit voltage supply => Page 130 |
| | - Current draw when ignition is off | - Eliminate current draw |
| More than 15.000 V | - Voltage regulator on alternator defective | - Check voltage, replace regulator if necessary: => Electrical system; Repair group 27 |

Volkswagen AG. Volkswagen AG does not guarantee or accept any liability with respect to the correctness of information in this document. Copying for private or commercial purposes, in part or in whole, is not permitted unless authorised by Volkswagen AG. Protected by copyright.

satelettronica

| | | |
|---|---|---|
| | - Excess voltage due to jump starting or quick charging unit | - Interrogate fault memory => Page 9 |

**Evaluating display group 4, display zone 3 - Coolant temperature**

| Appears on display | Possible fault cause | Fault elimination |
|---|---|---|
| Less than 80.0 °C | - Engine too cold<br>- Coolant temperature sender or wiring to engine control unit | - If necessary carry out test drive<br>- Check coolant temperature sender =>Page 96 |
| More than 110.0 °C | - Radiator soiled<br>- Radiator fan not functioning<br>- Thermostat defective (Thermostat)<br>- Coolant temperature sender or wiring to engine control unit | - Clean radiator<br>- Check radiator fan: => Repair group 19; Removing and installing parts of cooling system; Checking radiator fan Checking radiator fan<br>- Check thermostat: => Repair group 19; Removing and installing parts of cooling system; Parts of cooling system - engine side Parts of cooling system - engine side<br>- Check coolant temperature sender =>Page 96 |
| Constant -40.0 °C | - Wiring open circuit or short to positive | - Check coolant temperature sender =>Page 96 |
| Constant 129.0 °C | - Short to earth | |

**Evaluating display group 4, display zone 4 - Intake air temperature**

| Appears on display | Possible fault cause | Fault elimination |
|---|---|---|
| Constant -40.0 °C | - Wiring open circuit or short to positive | - Check intake air temperature sender =>Page 92 |
| Constant 129.0 °C | - Short to earth | |

**Display group 5 -Basic functions-**

▪ Engine running at idling speed

Read measured value block 5 ⇒ ◂ Indicated on display

| xxxx rpm | xxx.x % | xxx km/h | Text | ◂ Display zones | Specification | Evaluation |
|---|---|---|---|---|---|---|
| 1 | 2 | 3 | 4 | Operating mode: Idling, part throttle, enrichment, overrun, full throttle | Idling | --- |
| | | | | Road speed | 0 km/h | --- |
| | | Engine load | | | 15.0...30.0 % | => Page 38 |
| | Engine speed (idling speed) | | | | 600...800 rpm | => Page 34 |

**Display group 6 -Basic functions-**

▪ Engine running at idling speed

Read measured value block 6 ⇒ ◂ Indicated on display

| xxxx rpm | xxx.x % | xxx.x °C | xx.x % | ◂ Display zones | Specification | Evaluation |
|---|---|---|---|---|---|---|
| 1 | 2 | 3 | 4 | Altitude correction factor | -50.0...20.0 % | --- |

Protected by copyright. Copyright by Volkswagen AG.
Volkswagen AG, Volkswagen AG, Wolfsburg, Germany. Copyright by Volkswagen AG. Reproduction or reprinting, in whole or in part, is not permitted unless authorized by Volkswagen AG. Volkswagen AG does not guarantee or assume any liability with respect to the correctness of information in this document. Copyright by Volkswagen AG.
satelettronica

| | | | | |
|---|---|---|---|---|
| | | Intake air temperature | -30.0...120.0 °C | => Page 37 |
| | Engine load | | 15.0...30.0 % | => Page 38 |
| Engine speed (idling speed) | | | 600...800 rpm | => Page 34 |

*Note on display zone 3:*

*The total temperature range is given as the specification. The displayed value must be above ambient temperature.*

# 9 - Evaluating measured value blocks, display groups 10...29 -Ignition-

## 9.1 - Evaluating measured value blocks, display groups 10...29 -Ignition-

| Display group 10 -Ignition- | | | | | | |
|---|---|---|---|---|---|---|
| ▪ Engine running at idling speed | | | | | | |
| Read measured value block 10 | | | ⇒ | ◂ Indicated on display | | |
| xxxx rpm | xxx.x % | xxx.x % | xx.x°BTDC | | | |
| 1 | 2 | 3 | 4 | ◂ Display zones | Specification | Evaluation |
| | | | | Ignition angle | -5.0...10.0 ° BTDC | --- |
| | | | Throttle valve angle (Potentiometer 1 -G187) | | 0.2...5.0 % | => Page 38 |
| | | Engine load | | | 15.0...30.0 % | => Page 38 |
| | Engine speed (idling speed) | | | | 600...800 rpm | => Page 34 |

*Note on display zone 3:*

*With the accelerator pedal floored the display value must be approx. 100.0 %.*

**Evaluating display group 10, display zone 2 - Engine load**

| Appears on display | Possible fault cause | Fault elimination |
|---|---|---|
| Less than 15.0 % | - Lesser values can only occur when driving in overrun | --- |
| Larger than 30.0 % | - Rough idling (not running on all cylinders)<br>- Throttle valve control part defective<br>- Electric consumers switched on<br>- Steering wheel at full lock | - Check injectors => Page 147<br>- Check throttle valve control part => Page 87<br>- Switch off electric consumers<br>- Set steering wheel to centre position |

**Evaluating display group 10, display zone 3 - Throttle valve angle potentiometer 1**

| Appears on display | Possible fault cause | Fault elimination |
|---|---|---|
| More than 5 % | - Engine control unit not adapted to throttle valve control part<br>- Throttle valve potentiometer in throttle valve control part defective<br>- Throttle valve sticking | - Adapt engine control unit to throttle valve control part => Page 135<br>- Check throttle valve control part => Page 87<br>- Eliminate cause |

Protected by copyright. Copying for private or commercial purposes, in part or in whole is not permitted unless authorised by Volkswagen AG. Volkswagen AG does not guarantee or accept any liability with respect to the correctness of information in this document. Copyright by Volkswagen AG.
satelettronica

Only engines conforming to EU 4 standard (engine code AKP, AUC, AUD)

| Display group14 -Ignition- Misfire recognition total | | | | | | |
|---|---|---|---|---|---|---|
| ▪ Whilst driving | | | | | | |
| Read measured value block 14 | | | ⇒ | ◂ Indicated on display | | |
| xxxx rpm | xx.x % | xxx | Text | | | |
| 1 | 2 | 3 | 4 | ◂ Display zones | Specification | Evaluation |
| | | | | Misfire recognition (activated, blocked) | activated | --- |
| | | | Misfire total | | 0 | => Page 39 |
| | | Engine load | | | 15.0...100.0 % | --- |
| | Engine speed | | | | 600...5700 rpm | --- |

Evaluating display group 14, display zone 3 - Total number of misfires

| Appears on display | Possible fault cause | Fault elimination |
|---|---|---|
| More than 0 | - Spark plug defective<br>- Spark plug connector defective<br>- Ignition coil defective<br>- Ignition coil output stage defective | - Check spark plugs and ignition/HT wiring with connector => Page 154 |
| | - Injector defective | - Check injectors<br>=> Page 103 |

Only engines conforming to EU 4 standard (engine code AKP, AUC, AUD)

| Display group 15 -Ignition- Misfire recognition Cyl. 1 to Cyl. 3 | | | | | | |
|---|---|---|---|---|---|---|
| ▪ Whilst driving | | | | | | |
| Read measured value block 15 | | | ⇒ | ◂ Indicated on display | | |
| xxx | xxx | xxx | Text | | | |
| 1 | 2 | 3 | 4 | ◂ Display zones | Specification | Evaluation |
| | | | | Misfire recognition (activated, blocked) | activated | --- |
| | | | Misfire Cyl. 3 | | 0 | => Page 40 |
| | | Misfire Cyl. 2 | | | 0 | => Page 40 |
| | Misfire Cyl. 1 | | | | 0 | => Page 40 |

Only engines conforming to EU 4 standard (engine code AKP, AUC, AUD)

| Display group 16 -Ignition- misfire recognition Cyl. 4 | | | | | | |
|---|---|---|---|---|---|---|
| ▪ Whilst driving | | | | | | |
| Read measured value block 16 | | | ⇒ | ◂ Indicated on display | | |
| xxx | --- | --- | Text | | | |
| 1 | 2 | 3 | 4 | ◂ Display zones | Specification | Evaluation |
| | | | | Misfire recognition (activated, blocked) | activated | --- |
| | | | | | | |
| | | | | | | |
| | Misfire Cyl. 4 | | | | 0 | => Page 40 |

Protected by copyright. Copyright by Volkswagen AG. Volkswagen AG does not guarantee or accept any liability with respect to the correctness of information in this document. Copyright by Volkswagen AG. Protected by copyright. Copying for private or commercial purposes, in part or in whole, is not permitted unless authorized by Volkswagen AG.
satelettronica

**Evaluating display group 15 display zones 1 to 3 or display group 16 display zone 1 - Misfire recognition Cyl. 1 to Cyl. 4**

| Appears on display | Possible fault cause | Fault elimination |
|---|---|---|
| More than 0 | - Spark plug defective<br>- Spark plug connector defective<br>- Ignition coil defective<br>- Ignition coil output stage defective | - Check spark plugs and ignition/HT wiring with connector => Page 154 |
| | - Injector defective | - Check injectors => Page 103 |

| Display group 20 -Ignition- Knock control Cyl. 1 to Cyl. 4 | | | | | | |
|---|---|---|---|---|---|---|
| ▪ Whilst driving | | | | | | |
| Read measured value block 20 ⇒ | | | | ◂ Indicated on display | | |
| xx.x °CA | xx.x °CA | xx.x °CA | xx.x °CA | | | |
| 1 | 2 | 3 | 4 | ◂ Display zones | Specification | Evaluation |
| | | | | Cyl. No. 4 retardation of ignition by knock control | 0.0...12.0 °CA | => Page 40 |
| | | | Cyl. No. 3 retardation of ignition by knock control | | 0.0...12.0 °CA | => Page 40 |
| | | Cyl. No. 2 retardation of ignition by knock control | | | 0.0...12.0 °CA | => Page 40 |
| | Cyl. No. 1 retardation of ignition by knock control | | | | 0.0...12.0 °CA | => Page 40 |

***Note on display zones 1 to 4:***

*Display value should be 0.0 °CA at idling speed.*

**Evaluating display group 20, display zones 1 to 4 - Cyl. 1 to Cyl. 4 ignition retardation**

| Appears on display | Possible fault cause | Fault elimination |
|---|---|---|
| All cylinders greater than 12.0 °CA | - Knock sensor defective | - Check knock sensor => Page 157 |
| | - Connector corroded | |
| | - Knock sensor incorrectly tightened | - Loosen knock sensor and tighten to 20 Nm |
| | - Ancillary components on engine loose | - Tighten ancillary components |
| | - Poor fuel quality | - Change type of fuel |
| One cylinder deviates greatly from the others | - Connector corroded | - Check knock sensor => Page 157 |
| | - Engine damaged | - Check compression pressures: => Repair group 15; Removing and installing cylinder head; Checking compression pressure Checking compression pressure |
| | - Ancillary components on engine loose | - Tighten ancillary components |

| Display group 22 -Ignition- Cyl. 1 and Cyl. 2 knock control | | | | |
|---|---|---|---|---|
| ▪ Whilst driving | | | | |
| Read measured value block 22 ⇒ | | | | ◂ Indicated on display |
| xxxx rpm | x.xx % | xx.x °CA | xx.x °CA | |

Protected by copyright. Copyright by Volkswagen AG. Volkswagen AG does not guarantee or accept any liability with respect to the correctness of information in this document. Copyright by Volkswagen AG. Reproduction, in whole or in part, unless authorised by Volkswagen AG, is not permitted.
satelettronica

| 1 | 2 | 3 | 4 | ◂ Display zones | Specification | Evaluation |
|---|---|---|---|---|---|---|
| | | | | Cyl. No. 2 retardation of ignition timing by knock control | 0.0...12.0 °CA | => Page 41 |
| | | | Cyl. No. 1 retardation of ignition timing by knock control | | 0.0...12.0 °CA | => Page 41 |
| | | Engine load | | | 15.0...100.0 % | --- |
| | Engine speed | | | | 600...5700 rpm | --- |

*Note on display zones 3 and 4:*

*The display value should be 0.0 °CA at idling speed.*

| Display group 23 -Ignition- Cyl. 3 and Cyl. 4 knock control | | | | | | |
|---|---|---|---|---|---|---|
| ▪ Whilst driving | | | | | | |
| Read measured value block 23 | | | ⇒ | ◂ Indicated on display | | |
| xxxx rpm | x.xx % | xx.x °CA | xx.x °CA | | | |
| 1 | 2 | 3 | 4 | ◂ Display zones | Specification | Evaluation |
| | | | | Cyl. No. 4 retardation of ignition by knock control | 0.0...12.0 °CA | => Page 41 |
| | | | Cyl. No. 3 retardation of ignition by knock control | | 0.0...12.0 °CA | => Page 41 |
| | | Engine load | | | 15.0...100.0 % | --- |
| | Engine speed | | | | 600...5700 rpm | --- |

*Note on display zones 3 and 4:*

*The display value should be 0.0 °CA at idling speed.*

**Evaluating display groups 22/23, display zones 3 and 4 - Retardation of ignition**

| Appears on display | Possible fault cause | Fault elimination |
|---|---|---|
| All cylinders greater than 12.0 °CA | - Knock sensor defective | - Check knock sensor => Page 157 |
| | - Connector corroded | |
| | - Knock sensor incorrectly tightened | - Loosen knock sensor and tighten to 20 Nm |
| | - Ancillary components on engine loose | - Tighten ancillary components |
| | - Poor fuel quality | - Change type of fuel |
| One cylinder deviates greatly from the others | - Connector corroded | - Check knock sensor => Page 157 |
| | - Engine damaged | - Check compression pressures: => Repair group 15; Removing and installing cylinder head; Checking compression pressure Checking compression pressure |
| | - Ancillary components on engine loose | - Tighten ancillary components |

| Display group 28 -Ignition- knock control | |
|---|---|
| ▪ Whilst driving | |
| ▪ Control unit in mode 04-Basic settings | |
| Read measured value block 28 ⇒ | ◂ Indicated on display |

Protected by copyright. Copying for private or commercial purposes, in part or in whole, is not permitted unless authorised by Volkswagen AG. Volkswagen AG does not guarantee or accept any liability with respect to the correctness of information in this document.
satelettronica

| xxxx rpm | xx.x % | xxx.x °C | Text | ◂ Display zones | Specification | Evaluation |
|---|---|---|---|---|---|---|
| 1 | 2 | 3 | 4 | Knock sensor test result (Test On / Test OFF / Sys. OK. / Sys. n.OK) | Sys. OK. | --- |
| | | | | Coolant temperature | 80.0...110.0 °C | => Page 37 |
| | | | | Engine load | 15.0...100.0 % | --- |
| | | | | Engine speed | 2200...5700 rpm | --- |

# 10 - Evaluating measured value blocks, display grps 30...49, 99 -Lambda regulation-

## 10.1 - Evaluating measured value blocks, display grps 30...49, 99 -Lambda regulation-

| Display group 30 -Lambda regulation- | | | | | | |
|---|---|---|---|---|---|---|
| ▪ Engine running at idling speed<br>Read measured value block 30 | | | ⇒ | ◂ Indicated on display | | |
| xxx | xxx | --- | --- | | | |
| 1 | 2 | 3 | 4 | ◂ Display zones | Specification | Evaluation |
| | | | | | | |
| | | | | | | |
| | | Status of Lambda regulation after catalyst1)<br>▪ Catalyst temperature at least 400.0 °C<br>▪ (=>display group 34, display zone 2) | | | 111 | => Page 42 |
| | Status of Lambda regulation before catalyst | | | | 111 | => Page 42 |

1) Only engines conforming to EU 4 standard (engine code AKP, AUC, AUD)

*Notes on display zones 1 and 2:*

- The first position in 3-digit number block fluctuates between 0 and 1 (Lambda probe heating off and on).
- Depending on status of Lambda regulation 0 or 1 is displayed alternately in 3-digit number block.
- The bits in display zones 1 and 2 are set to 1, when the catalyst temperature has exceeded 400.0 °C (=> display group 34, display zone 2).

**Significance of figures in 3-digit number block, display zones 1 and 2 - status of Lambda regulation before and after catalyst**

| Significance if display = 1 | | | |
|---|---|---|---|
| 1 | 2 | 3 | Significance |
| | | 1 | Lambda regulation active |
| | 1 | | Lambda probe operationally ready |
| 1 | | | Lambda probe heating on |

| Display group 32 -Lambda regulation- Lambda learnt values before catalyst | | | | |
|---|---|---|---|---|
| ▪ Engine running at idling speed<br>Read measured value block 32 | | | ⇒ | ◂ Indicated on display |
| xx.x % | xx.x % | --- | --- | |



Protected by copyright. Copying for private or commercial purposes, in part or in whole, is not permitted unless authorised by Volkswagen AG. Volkswagen AG does not guarantee or accept any liability with respect to the correctness of information in this document. Copyright by Volkswagen AG.
satelettronica

| 1 | 2 | 3 | 4 | ◂ Display zones | Specification | Evaluation |
|---|---|---|---|---|---|---|
| | | | | | | |
| | | | | | | |
| | | Lambda learnt value at part load (multiplicative) before catalyst | | | -10.0...10.0 % | => Page 43 |
| | Lambda learnt value at idling speed (additive) before catalyst | | | | -10.0...10.0 % | => Page 43 |

*Notes on display zones 1 and 2:*

*Low values indicate that the engine is running too rich and therefore the Lambda regulation is leaning the mixture.*

- High values indicate that the engine is running too lean and therefore the Lambda regulation enriches the mixture.
- If there is no voltage supply to the control unit all the values learnt will be cancelled.
- add = additive - The effects of the fault (e.g. unmetered air) will reduce as the engine speed increases. The injection period will be modified by a fixed amount for additive learnt values. This amount is not dependent upon the basic injection period.
- mul = multiplicative - The effects of the fault (e.g. faulty injector) will increase as the engine speed increases. A multiplicative learnt value is a proportional change to the injection period. This change is dependent on the basic injection period.

*Initiating learning process: Control unit in mode 04, Basic settings*

- Learning conditions for idling: Idling, coolant temperature min. 75 °C, intake air temperature max. 90 °C
- Learning conditions for part load: coolant temperature min. 75 °C, intake air temperature max. 90 °C

**Evaluating display group 32, display zones 1 and 2 - Lambda learnt values before catalyst**

| Appears on display | Possible fault cause | Fault elimination |
|---|---|---|
| Low Lambda learnt values | - Low learnt values at idling but with normal learnt values at part throttle: possible oil dilution (high level of fuel in oil) | - Disappears after motorway drive or oil change |
| | - Injector leaking | - Check injector =>Page 103 |
| | - Fuel pressure too high | - Check fuel pressure regulator and holding pressure => Page 109 |
| | - Tank venting valve for activated charcoal filter permanently open | - Check tank venting valve => Page 22 , final control diagnosis |
| | - Lambda probe heating defective or Lambda probe soiled | - Check Lambda probe heating before catalyst =>Page 80 |

| Appears on display | Possible fault cause | Fault elimination |
|---|---|---|
| High Lambda learnt values | - High learnt values at idling speed, not so high learnt values at part throttle: possible unmetered air in area of intake manifold | - Check intake air system for leaks =>Page 113 |
| | - Injector blocked | - Check injectors =>Page 103 |
| | - Fuel pressure too low | - Check fuel pressure regulator and holding pressure => Page 109 |

Copyright by Volkswagen AG. Volkswagen AG does not guarantee, accuracy or liability with respect to the correctness of information in this document. Copying for private or commercial purposes, in part or in whole, is not permitted unless authorised by Volkswagen AG.
satelettronica

| | | |
|---|---|---|
| | - Unmetered air at exhaust manifold gasket<br>- Lambda probe heating defective or Lambda probe soiled | - Check Lambda probe heating before catalyst =>Page 80 |

| Display group 33 -Lambda regulation- Lambda regulation values before catalyst | | | | | | |
|---|---|---|---|---|---|---|
| ▪ Engine running at idling speed | | | | | | |
| Read measured value block 33 | | | ⇒ | ◂ Indicated on display | | |
| xx.x % | x.xxx V | --- | --- | | | |
| 1 | 2 | 3 | 4 | ◂ Display zones | Specification | Evaluation |
| | | | | | | |
| | | | | | | |
| | | Lambda probe voltage before catalyst | | | 1.000...2.000 V | --- |
| | Lambda regulator before catalyst | | | | -10.0...10.0 % | => Page 44 |

*Notes on display zone 1:*

- The display must fluctuate around 0.0 %. If constant 0.0 % is displayed, the Lambda regulation has switched from regulation to control, because there is a fault in the Lambda regulation. Interrogate fault memory => Page 9 .

**Evaluating display group 33, display zone 1 - Lambda regulator before catalyst**

| Appears on display | Possible fault cause | Fault elimination |
|---|---|---|
| Outside tolerance range | - Minus range: Mixture too rich, Lambda control weakens mixture<br>- Positive range: Mixture too lean, Lambda control enriches mixture | - Wait 30 seconds until the display has stabilised |
| | - Unmetered air | - Check intake system for leaks => Page 113 |
| | - Injector defective | - Check injectors =>Page 103 |
| | - Lambda learnt value on limit | - Check Lambda learnt value in display group 32 |

**Only engines conforming to EU 4 standard (engine code AKP, AUC, AUD)**

| Display group 34 -Lambda regulation- Lambda probe diagnosis before catalyst (checking ageing via amplitude duration monitoring) | | | | | | |
|---|---|---|---|---|---|---|
| ▪ Control unit in mode 04-Basic setting | | | | | | |
| - Depress brake pedal | | | | | | |
| ▪ Vehicle stationary, engine runs at increased idling speed | | | | | | |
| Read measured value block 34 | | | ⇒ | ◂ Indicated on display | | |
| xxxx rpm | xxx.x °C | x.xx | Text | | | |
| 1 | 2 | 3 | 4 | ◂ Display zones | Specification | Evaluation |
| | | | | Result of Lambda probe before catalyst ageing check (Test OFF / test ON / B1-P1 OK / B1-P1 n.OK) | B1-P1 OK | --- |
| | | | Amplitude duration Lambda probe before catalyst | | 0.7... 2.00 | --- |

satelettronica

| | | | |
|---|---|---|---|
| | Catalyst temperature | min. 400.0 °C | --- |
| Engine speed | | 1100...1300 rpm | --- |

*Note on display zone 2:*

*Value calculated from engine speed and engine load.*

Only engines conforming to EU 4 standard (engine code AKP, AUC, AUD)

| Display group 36 -Lambda regulation- Operational readiness of probe after catalyst | | | | | | |
|---|---|---|---|---|---|---|
| ▪ Control unit in mode 04-Basic setting<br>- Depress brake pedal<br>▪ Vehicle stationary, engine runs at increased idling speed | | | | | | |
| Read measured value block 36 ⇒ | | | | ◂ Indicated on display | | |
| x.xxx V | xxx.x °C | x.xx | Text | | | |
| 1 | 2 | 3 | 4 | ◂ Display zones | Specification | Evaluation |
| | | | | Check Lambda probe after catalyst (Test ON / test OFF / B1-P2 OK. / B1-P2 n.OK) | B1-P2 OK | --- |
| | | | Specification Lambda probe after catalyst | | --- | --- |
| | | Catalyst temperature | | | min. 400.0 °C | --- |
| | Lambda probe voltage after catalyst | | | | 0.000...1.000 V | => Page 46 |

*Notes on display zone 1:*

- The voltage signal "rich mixture (low level of residual oxygen)" is approx. 0.700...0.900 V.
- The voltage signal "lean mixture (high level of residual oxygen)" is approx. 0.000...0.300 V.
- When changing from "rich" to "lean" and back again (λ = 1.0) the voltage jump will change from 0.700...0.900 V to 0.000...0.300 V or back again.
- Due to the steep voltage jumps the Lambda control cannot keep the ideal mixture composition λ = 1.0 constant. The control fluctuates constantly between conditions "slightly too lean" and "slightly too rich".
- The displayed value must temporarily drop below 0.300 V and exceed 0.600 V. Displayed values below 0.450 V signifies lean, above 0.450 V rich.

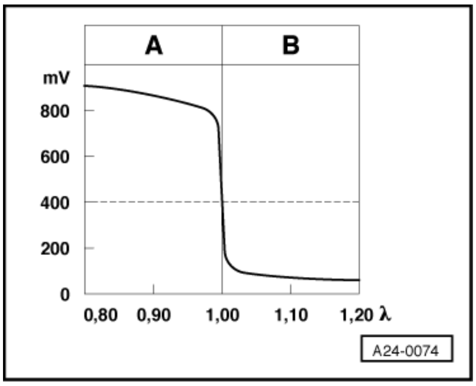


*-> Lambda probe voltage Uλ in mV*

*A: High Lambda probe voltage*

- Rich mixture (excess of fuel or shortage of air)
- Higher CO value

*B: Low Lambda probe voltage*

- Lean mixture (shortage of fuel or excess air)

Protected by copyright. Copying for private or commercial purposes, in part or in whole, is not permitted unless authorised by Volkswagen AG. Volkswagen AG does not guarantee or accept any liability with respect to the correctness of information in this document. Copyright by Volkswagen AG.
satelettronica

- Lower CO value

**Evaluating display group 36, display zone 1 - Lambda probe voltage, Lambda probe after catalyst**

| Appears on display | Possible fault cause | Fault elimination |
|---|---|---|
| Constant 1.085 V | - Short to positive via:<br>- Lambda probe, probe wiring, earth wiring, engine control unit | - Check Lambda probe 2 basic voltage<br>=> Page 126 |
| Constant between 0.400...0.500 V | - Open circuit via:<br>- Lambda probe, probe wiring, earth wiring, engine control unit | |
| Constant 0.000 V | - Short to earth via:<br>- Lambda probe, probe wiring, earth wiring, engine control unit | |

**Display group 37 -Lambda regulation- Lambda probes**

- Vehicle stationary, engine running at increased idling speed
- Control unit in mode 04-Basic settings

Read measured value block 37 ⇒ ◂ Indicated on display

| xxx % | x.xxx V | xxx.xxx | Text | ◂ Display zones | Specification | Evaluation |
|---|---|---|---|---|---|---|
| 1 | 2 | 3 | 4 | | | |
| | | | | Test of Lambda probes (Test ON / OFF / Syst. OK / n.OK) | Syst. OK | |
| | | | Not for Service | | --- | --- |
| | | Lambda probe voltage Lambda probe after catalyst | | | 0.000...1.000 V | => Page 46 |
| | Engine load | | | | 15.0...30.0 % | => Page 38 |

**Display group 41 -Lambda regulation- Lambda probe heating**

- Engine running at idling speed

Read measured value block 41 ⇒ ◂ Indicated on display

| --- | Text | --- | Text | ◂ Display zones | Specification | Evaluation |
|---|---|---|---|---|---|---|
| 1 | 2 | 3 | 4 | | | |
| | | | | Lambda probe heating after catalyst1) | Htg.aC.ON<br>Htg.aC.OFF | --- |
| | | | | | | |
| | | Lambda probe heating before catalyst | | | Htg.bC.ON<br>Htg.bC.OFF | --- |
| | | | | | | |

1) Only engines conforming to EU 4 standard (engine code AKP, AUC, AUD)

***Note:***

*The Lambda probe heating may be switched ON or OFF depending on the operating conditions of the engine, therefore the display in display zone 2 or 4 may show "Htg.b(a)C.ON" or alternating from "Htg.b(a)C.ON" to Htg.b(a)C.OFF".*

**Only engines conforming to EU 4 standard (engine code AKP, AUC, AUD)**

**Display group 46 -Lambda regulation- Catalyst diagnosis (conversion test)**

- Control unit in mode 04-Basic setting

Protected by copyright. Copying or passing on to third parties or in whole or in part for commercial purposes is not permitted unless authorised by Volkswagen AG. Volkswagen AG does not guarantee or accept any liability with respect to the correctness of information in this document. Copyright by Volkswagen AG.
satelettronica

| | | | | | | |
|---|---|---|---|---|---|---|
| - Depress brake pedal<br>▪ Vehicle stationary, engine runs at increased idling speed | | | | | | |
| Read measured value block 46 ⇒ | | | | ◂ Indicated on display | | |
| xxxx rpm | xxx.x °C | x.xx | Text | | | |
| 1 | 2 | 3 | 4 | ◂ Display zones | Specification | Evaluation |
| | | | | Result of catalyst conversion test (Test OFF / test ON / Cat B1 OK/Cat B1 n.OK) | Cat B1 OK | --- |
| | | | Amplitude ratio | | 0.00...0.50 | --- |
| | | Catalyst temperature | | | min. 400.0 °C | --- |
| | Engine speed | | | | 1100...1300 rpm | --- |

| | | | | | | |
|---|---|---|---|---|---|---|
| **Display group 99 -Lambda regulation- Lambda regulation operating condition** | | | | | | |
| ▪ Engine running at idling speed<br>▪ Control unit in mode 04-Basic setting, Lambda regulation off<br>▪ Control unit in mode 08-Read measured value block, Lambda regulation on | | | | | | |
| Read measured value block 99 ⇒ | | | | ◂ Indicated on display | | |
| xxxx rpm | xxx.x °C | xx.x % | Text | | | |
| 1 | 2 | 3 | 4 | ◂ Display zones | Specification | Evaluation |
| | | | | Lambda regulation operating mode | λ-Reg. OFF or λ-Reg. ON | --- |
| | | | Lambda regulator before catalyst | | -10.0...10.0 % | => Page 44 |
| | | Coolant temperature | | | 80.0...110.0 °C | => Page 37 |
| | Engine speed (idling speed) | | | | 600...800 rpm | => Page 34 |

*Notes on display zone 4:*

- For a defined fault finding the Lambda regulation is switched off when selecting display group 99 under "Basic setting" or switched on under "Read measured value block".
  When the function 04 "Basic setting" is exited the Lambda regulation is automatically active again.
- It is possible to switch between the function 04 "Basic setting" and the function 08 "Read measured value block" by pressing the keys 4 and 8 on V.A.G 1551/1552.

# 11 - Evaluating measured value blocks, display groups 50...69 -Speed regulation-

## 11.1 - Evaluating measured value blocks, display groups 50...69 -Speed regulation-

| | | | | | | |
|---|---|---|---|---|---|---|
| **Display group 50 -Speed regulation- Operating condition** | | | | | | |
| ▪ Engine running at idling speed | | | | | | |
| Read measured value block 50 ⇒ | | | | ◂ Indicated on display | | |
| xxxx rpm | xxxx rpm | Text | Text | | | |
| 1 | 2 | 3 | 4 | ◂ Display zones | Specification | Evaluation |
| | | | | Air conditioner compressor operating mode ON/OFF | Compr. ON or Compr. OFF | --- |
| | | | Air conditioner operating mode | | A/C-High or A/C-Low | --- |
| | | Engine speed (idling speed specification) | | | 700 rpm | --- |
| | Engine speed (idling speed) | | | | 600...800 rpm | => Page 34 |

satelettronica

*Note on display zone 2:*

*The value displayed is the specified figure calculated by the control unit.*

*Notes on display zone 3:*

- A/C-High = Air conditioner demands too high a heating or cooling output
  A/C-Low = Air conditioner not switched on.

*Notes on display zone 4:*

- "Compr. OFF" is always displayed on vehicles without air conditioner.
- Checking signal from and to air conditioner compressor =>Page 139

| Display group 54 -Speed regulation- | | | | | | |
|---|---|---|---|---|---|---|
| ▪ Whilst driving | | | | | | |
| Read measured value block 54 | | | ⇒ | ◂ Indicated on display | | |
| xxxx rpm | Text | xxx.x % | xxx.x % | | | |
| 1 | 2 | 3 | 4 | ◂ Display zones | Specification | Evaluation |
| | | | | Throttle valve angle (Potentiometer 1 -G187) | 0.0...100.0% | --- |
| | | | Accelerator pedal position sender 1 -G79 | | 0.0...100.0% | --- |
| | | Operating mode: Idling, part throttle, enrichment, overrun, full throttle | | | --- | --- |
| | Engine speed | | | | 600...5700 rpm | --- |

| Display group 55 -Speed regulation- Idling stabilisation | | | | | | |
|---|---|---|---|---|---|---|
| ▪ Engine running at idling speed | | | | | | |
| Read measured value block 55 | | | ⇒ | ◂ Indicated on display | | |
| xxxx rpm | xx.x % | xx.x % | xxxxx | | | |
| 1 | 2 | 3 | 4 | ◂ Display zones | Specification | Evaluation |
| | | | | Operating mode | xxxxx | => Page 48 |
| | | | Idling speed regulation learnt value: Air conditioner on (A/C-High) Air conditioner off (A/C-Low) | | -8.0...8.0 % -5.0...5.0 % | --- |
| | | Idling speed regulator | | | -4.3...12.2 % | --- |
| | Engine speed (idling speed) | | | | 600...800 rpm | => Page 34 |

*Note on display zone 3:*

*Displayed is the amount that the idling speed stabilisation has moved away from the prescribed average. For a new engine the values lie in the positive range, because of the higher friction and in the negative range with an engine that has run-in.*

**Significance of figures in 5-digit number block, display zone 4 - operating modes**

| Significance if display = 1 | | | | | |
|---|---|---|---|---|---|
| 1 | 2 | 3 | 4 | 5 | Significance |
| | | | | 1 | Air conditioner compressor switched on |
| | | | x | | Not relevant |
| | | 1 | | | Air conditioning system switched on |
| | x | | | | Not relevant |

Protected by copyright. Copying for private or commercial purposes, in part or in whole, is not permitted unless authorised by Volkswagen AG. Copyright by Volkswagen AG. Volkswagen AG does not guarantee or accept any liability with respect to the correctness of information in this document.

satelettronica

| Significance if display = 1 | | | | | |
|---|---|---|---|---|---|
| x | | | | | Not relevant |

| Display group 56 -Speed regulation- Idling speed stabilisation | | | | | | |
|---|---|---|---|---|---|---|
| ▪ Engine running at idling speed | | | | | | |
| Read measured value block 56 | | | ⇒ | ◂ Indicated on display | | |
| xxxx rpm | xxxx rpm | xx.x % | xxxxx | | | |
| 1 | 2 | 3 | 4 | ◂ Display zones | Specification | Evaluation |
| | | | | Operating mode | xxxxx | => Page 48 |
| | | | Idling speed regulator | | -4.3...12.2 % | --- |
| | | Engine speed (idling speed specification) | | | 700 rpm | --- |
| | Engine speed (idling speed) | | | | 600...800 rpm | => Page 34 |

*Note on display zone 2:*

*The value displayed is the specified figure calculated by the control unit.*

| Display group 60 -Speed regulation- Adaption EPC system 1) | | | | | | |
|---|---|---|---|---|---|---|
| ▪ Ignition on, engine not running | | | | | | |
| ▪ Control unit in mode 04 basic setting | | | | | | |
| Read measured value block 60 | | | ⇒ | ◂ Indicated on display | | |
| xx % | xx % | x | Text | | | |
| 1 | 2 | 3 | 4 | ◂ Display zones | Specification | Evaluation |
| | | | | Adaption condition (ADP runs / ADP OK / ADP ERROR) | ADP OK | --- |
| | | | Learning step counter | | 0...9 | --- |
| | | Throttle valve angle (Potentiometer 2 -G188) | | | 90...10 % | --- |
| | Throttle valve angle (Potentiometer 1 -G187) | | | | 10...90 % | --- |

1) Adapting engine control unit to throttle valve control part => Page 135 .

*Note on display group 60:*

- Matching the throttle valve control part is performed with ignition switched on.
- Engine control unit is adapted to throttle valve control unit when selecting display group 60 under function 04 "Basic setting". This adaption must always be carried out when another throttle valve control part (or another complete engine) or another engine control unit is fitted.
- If the voltage supply is interrupted (battery disconnected) the adaption (matching) must be carried out again => Page 132 Procedure after voltage supply open circuit.
- During adaption the counter counts upwards from 0 to 9 in display zone 3.

| Display group 61 -Speed regulation- Electronic accelerator system | | | | | | |
|---|---|---|---|---|---|---|
| ▪ Whilst driving | | | | | | |
| Read measured value block 61 | | | ⇒ | ◂ Indicated on display | | |
| xxxx rpm | --- | xxx.x % | xxxxx | | | |
| 1 | 2 | 3 | 4 | ◂ Display zones | Specification | Evaluation |
| | | | | Operating mode | xxxxx | => Page 48 |
| | | | Throttle valve angle (Potentiometer 1 -G187) | | 0.0...100.0% | --- |
| | | | | | | |

satelettronica

| | | |
|---|---|---|
| Engine speed | 600...5700 rpm | --- |

| Display group 62 -Speed regulation- Electronic accelerator system | | | | | | |
|---|---|---|---|---|---|---|
| ▪ Ignition on, engine not running | | | | | | |
| Read measured value block 62 ⇒ | | | | ◂ Indicated on display | | |
| xx % | xx % | xx % | xx % | | | |
| 1 | 2 | 3 | 4 | ◂ Display zones | Specification | Evaluation |
| | | | | Accelerator pedal position sender 2 -G185 | 4...49 % | --- |
| | | | | Accelerator pedal position sender 1 -G79 | 12...97 % | --- |
| | | | | Throttle valve angle (potentiometer 2 -G188) | 90...10 % | --- |
| | | | | Throttle valve angle (potentiometer 1 -G187) | 10...90 % | --- |

# 12 - Evaluating measured value blocks, display groups 70...79 -Reducing emissions-

## 12.1 - Evaluating measured value blocks, display groups 70...79 -Reducing emissions-

**Only engines conforming to EU 4 standard (engine code AKP, AUC, AUD)**

| Display group 70 -Reducing emissions- Activated charcoal filter system diagnosis (tank breathing system) | | | | | | |
|---|---|---|---|---|---|---|
| ▪ Engine running at idling speed<br>▪ Coolant temperature at least 80.0 °C<br>▪ Control unit in mode 04-Basic settings | | | | | | |
| Read measured value block 70 ⇒ | | | | ◂ Indicated on display | | |
| xx.x % | xx.x % | --- | Text | | | |
| 1 | 2 | 3 | 4 | ◂ Display zones | Specification | Evaluation |
| | | | | Result of activated charcoal filter diagnosis (Test OFF / test ON / TVV OK / TVV n.OK) | TVV OK | --- |
| | | | | | | |
| | | Lambda regulator deviation during TVV diagnosis | | | -10.0...10.0 % | --- |
| | Tank venting valve -N80 for activated charcoal filter system duty cycle | | | | 0.0...99.0 % | --- |

***Note:***

*TVV means tank venting valve. The diagnosis can only be initiated once per engine start.*

***Notes on display zone 2:***

- Lambda regulator deviation in negative range: Activated charcoal filter full
- Lambda regulator deviation in positive range: Activated charcoal filter empty

**Only for engine code AUC**

| Display group 74 -Exhaust gas recirculation-positioner adaption1) | |
|---|---|
| ▪ Ignition switched on<br>▪ Control unit in mode 04-Basic settings | |
| Read measured value block 74 ⇒ | ◂ Indicated on display |

satelettronica

| xxx V | xxx V | xxx V | Text | | | |
|---|---|---|---|---|---|---|
| 1 | 2 | 3 | 4 | ◂ Display zones | Specification | Evaluation |
| | | | | Result, ADP runs/ ADP OK ERROR | ADP OK | --- |
| | | | | Actual potentiometer voltage value | 0.3...4.6 V | --- |
| | | | | 100% position | 2.9...4.6 V | --- |
| | | | | Zero position (basic setting) | 0.3...1.3 V | --- |

1) Performing positioner adaption for: Renewing engine control unit => Page 133

Renew exhaust gas recirculation valve =>Repair group 26

Only for engine code AUC

| Display group 75 -Exhaust gas recirculation diagnose- | | | | | | |
|---|---|---|---|---|---|---|
| ▪ Whilst driving (over-run) | | | | | | |
| Read measured valuve block 75 | | | ⇒ | ◂ Indicated on display | | |
| xxx mbar | xxx mbar | xxx mbar | Text | | | |
| 1 | 2 | 3 | 4 | ◂ Display zones | Specification | Evaluation |
| | | | | Test result (Test OFF/Test ON/Syst. OK/Syst. n.OK) | Syst. OK | --- |
| | | | | Intake manifold pressure difference | | --- |
| | | | | Difference from fast adjustment during EGR diagnosis | | --- |
| | | | | Intake manifold pressure | | --- |

# 13 - Evaluating measured value blocks, display group 100 -Readiness code-

## 13.1 - Evaluating measured value blocks, display group 100 -Readiness code-

Only engines conforming to EU 4 standard (engine code AKP, AUC, AUD)

| Display group 100 -Readiness code- | | | | | | |
|---|---|---|---|---|---|---|
| ▪ Engine running at idling speed | | | | | | |
| Read measured value block 100 | | | ⇒ | ◂ Indicated on display | | |
| xxxxxxxx | xxx.x °C | xxx.x s | xxxxxxxx | | | |
| 1 | 2 | 3 | 4 | ◂ Display zones | Specification | Evaluation |
| | | | | Diagnosis status | --- | --- |
| | | | | Period since last engine start | --- | --- |
| | | | | Coolant temperature | 80.0...110.0 °C | => Page 37 |
| | | | | Readiness code | 00000000 | => Page 51 |

Significance of figures in 8-digit number block, display zone 1 - Readiness code

| The readiness code is generated only when all display zones show 0 | | | | | | | | |
|---|---|---|---|---|---|---|---|---|
| 1 | 2 | 3 | 4 | 5 | 6 | 7 | 8 | Diagnostic function |
| | | | | | | | 0 | Catalyst |
| | | | | | | 0 | | Catalyst heating (currently no diagnosis/always "0") |
| | | | | | 0 | | | Activated charcoal filter system (tank venting system) |

Protected by copyright. Copying for private or commercial purposes, in part or in whole, is not permitted unless authorised by Volkswagen AG. Volkswagen AG does not guarantee or accept any liability with respect to the correctness of information in this document. Copyright by Volkswagen AG.

satelettronica

| The readiness code is generated only when all display zones show 0 | | | | | | | | |
|---|---|---|---|---|---|---|---|---|
| | | | | 0 | | | | Secondary air system (not fitted/always "0") |
| | | | 0 | | | | | Air conditioner (currently no diagnosis/always "0") |
| | | 0 | | | | | | Lambda probes |
| | 0 | | | | | | | Lambda probe heating |
| 0 | | | | | | | | Exhaust gas recirculation |

Protected by copyright. Copying for private or commercial purposes, in part or in whole, is not permitted unless authorised by Volkswagen AG. Volkswagen AG does not guarantee or accept any liability with respect to the correctness of information in this document. Copyright by Volkswagen AG.

satelettronica

# 24 - Mixture preparation, Injection

## 1 - Servicing injection system

### 1.1 - Servicing injection system

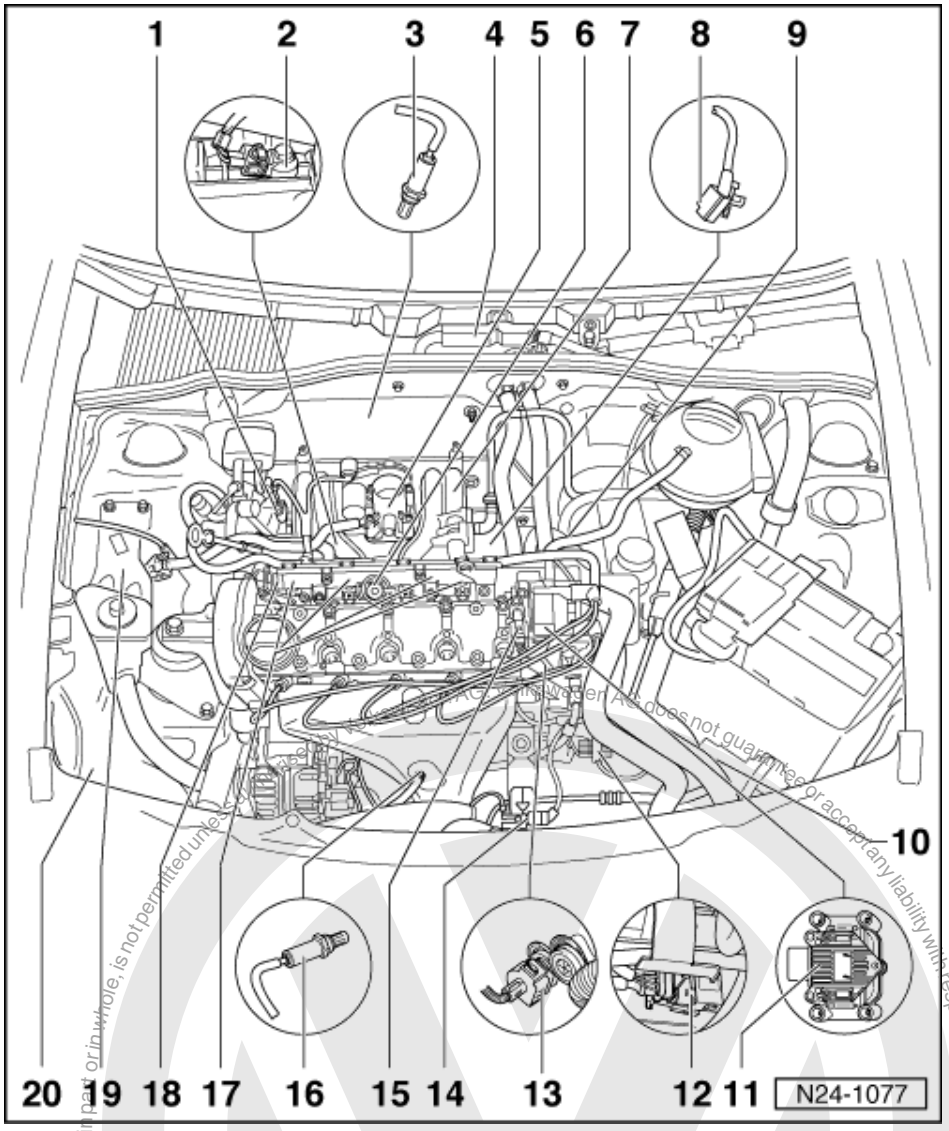


### 1.2 - Fitting locations overview

Components A and B are not shown on the illustration.

A - Brake pedal switch (F47) or brake light switch (F)

- Together in one housing, in footwell on brake pedal
- Checking => Page 140

B - Accelerator pedal position sender (G79)

satelettronica

- In footwell on accelerator pedal:

=> Repair group 20; Removing and installing parts of fuel supply system; Servicing accelerator mechanism
Removing and installing parts of fuel supply system Servicing accelerator mechanism

1 Intake manifold pressure sender (G71)* with intake air temperature sender (G42)*

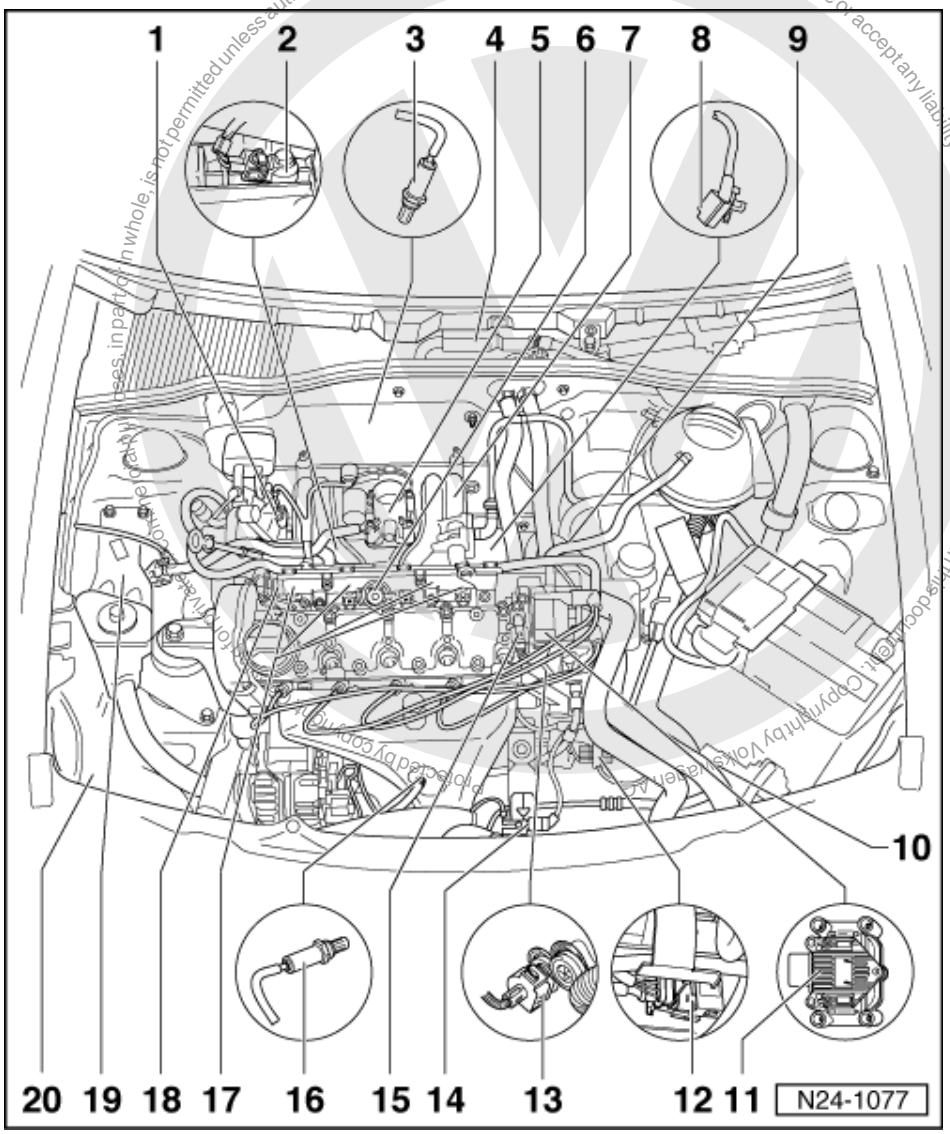


2 Knock sensor 1 (G61)*
3 Lambda probe 2 after catalyst (G130)*, 50 Nm
- Only engines fulfilling EU 4 standard

4 Motronic control unit (J220)*
5 Throttle valve control part (J338)*
6 Fuel pressure regulator
7 Intake manifold
8 Engine speed sender (G28)*
9 3 pin connector
- Black
- For engine speed sender (G28)

satelettronica

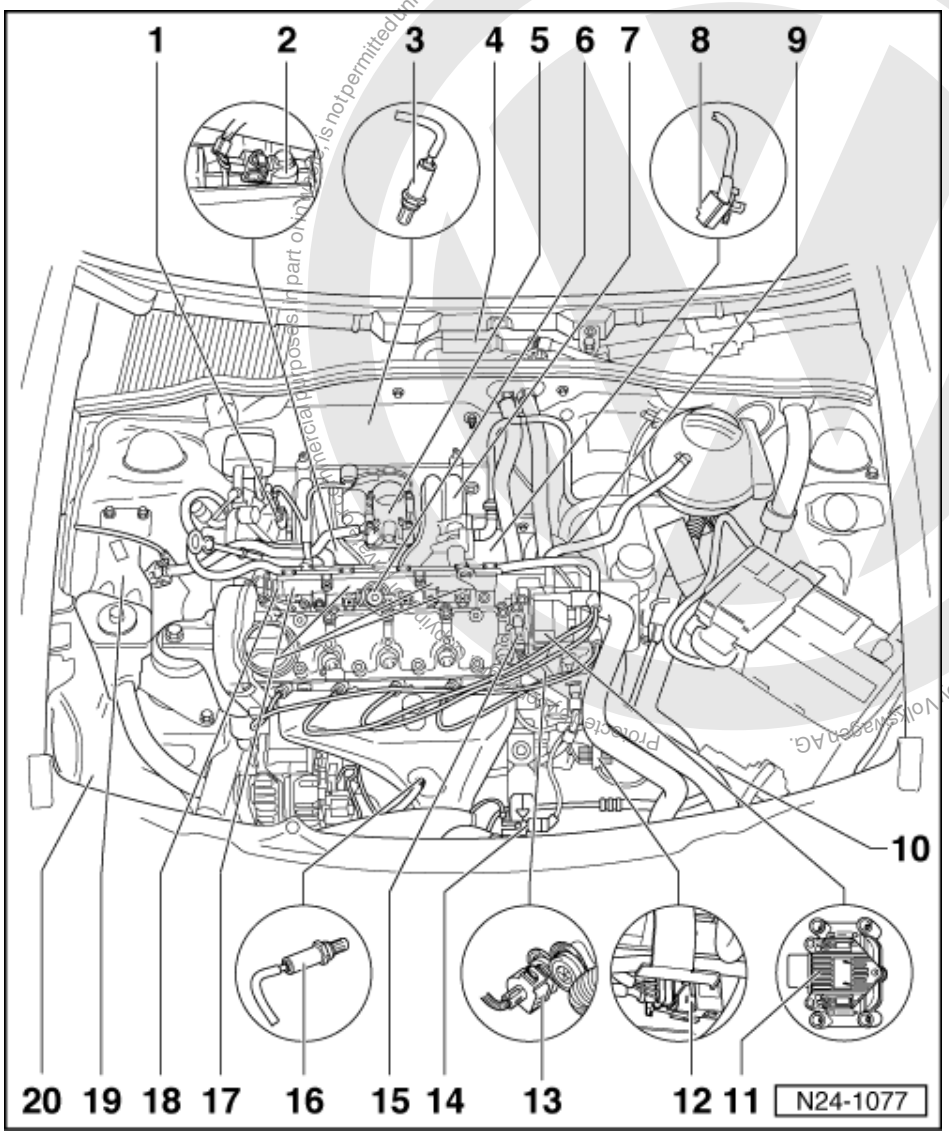


10 Power steering pressure switch (F88)

- Checking => Page 143

11 Ignition transformer (N152)*

- With ignition cable identification, do not interchange
- => Page 148 , item 2

12 Connector

- Only engines fulfilling EU 4 standard
- For Lambda probe 2 after catalyst (G130) and Lambda probe heating (Z29)
- Black, 4-pin
- Contacts 3 and 4 gold plated

13 Coolant temperature sender (G62)*

- With coolant temperature gauge sender (G2)

Copyright by Volkswagen AG. Volkswagen AG does not guarantee or accept any liability with respect to the correctness of information in this document. Copyright by Volkswagen AG. Reproduction, in whole or in part, is not permitted unless authorised by Volkswagen AG. Commercial purposes or part only.
satelettronica

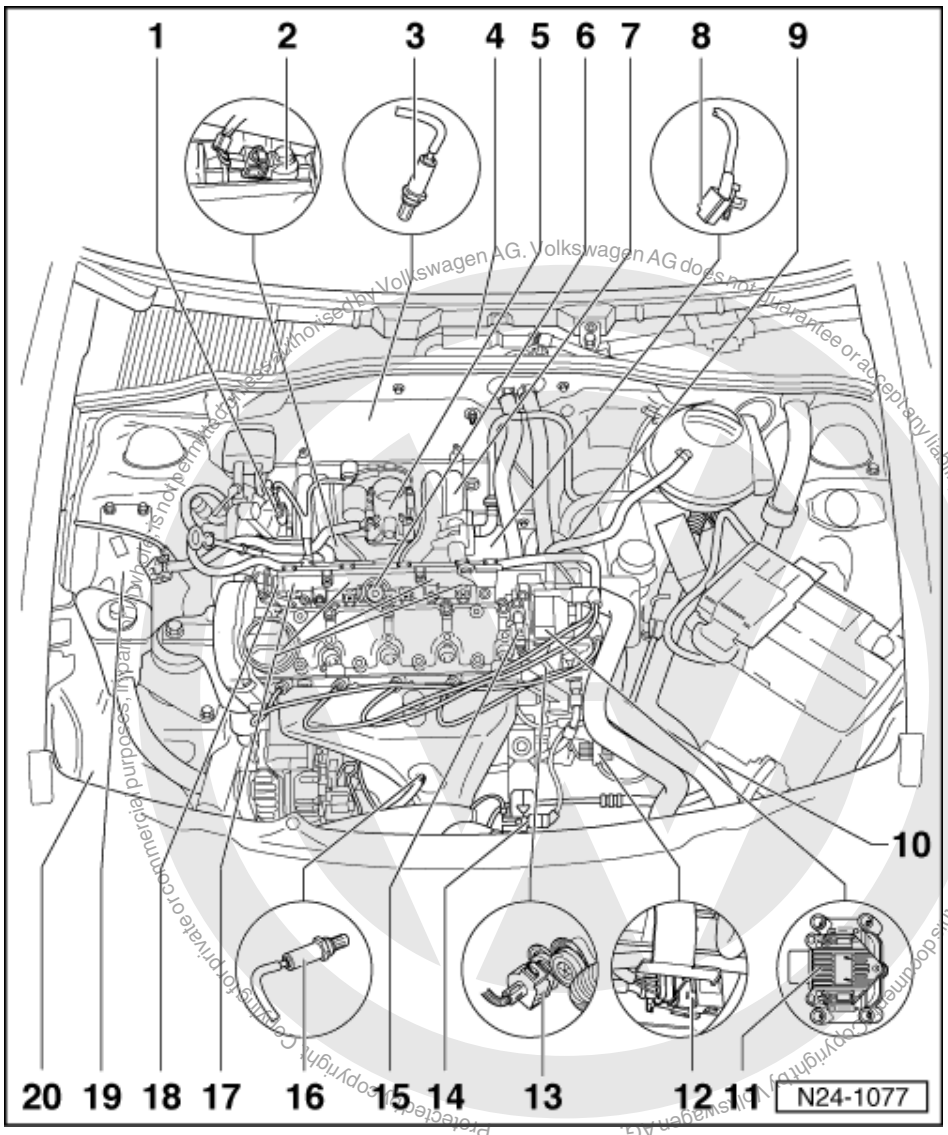


14 Connector

- For Lambda probe 1 before catalyst (G39) and Lambda probe heating (Z19)
  Engines conforming to MVEG II standard (engine codes AKK, ALD)
- Black, 4-pin
- Connector contacts 3 and 4 are gold-plated
  Engines conforming to EU 4 standard (engine codes AKP, AUC, AUD)
- Black, 6-pin
- Contacts gold plated

15 Hall sender (G40)*

- => Page 150 , item 8

16 Lambda probe 1 before catalyst (G39)*, 50Nm

17 Fuel rail

18 Injectors (N30...N33)*

satelettronica

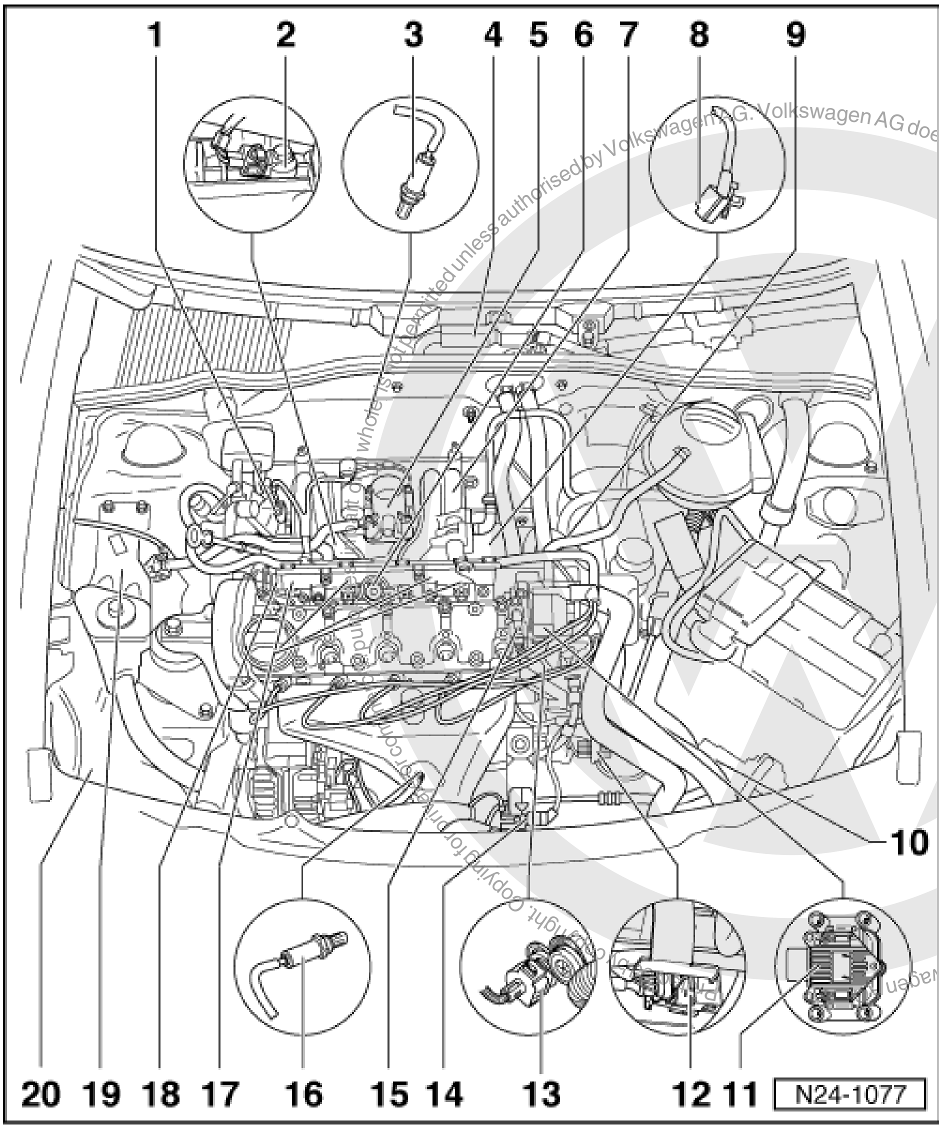


19 Tank venting valve (N80)*/**

=> Repair group 20; Activated charcoal filter system Activated charcoal filter system

20 Activated charcoal filter

=> Repair group 20; Activated charcoal filter system Activated charcoal filter system

## 1.3 - General notes on injection

Servicing ignition part:

=> Repair group 28

- The engine control unit is equipped with self-diagnosis. Before carrying out repairs and fault finding the fault memory must be interrogated. Also the vacuum hoses and connections must be checked (unmetered air).
- Fuel hoses in engine compartment must only be secured with spring type clips. The use of clamp or screw type clips is not permissible.
- Disconnecting and connecting the battery must only be done with the ignition switched off, otherwise the engine control unit could be damaged.
- Components marked with * are checked via the self diagnosis
  => Page 9 , interrogating and erasing fault memory.

satelettronica

- Components marked with **can be checked with the final control diagnosis => Page 22 .
- For trouble-free operation of the electrical components, a voltage of at least 11.5 V is necessary.
- Do not use sealants containing silicone. Particles of silicone drawn into the engine, will not be burnt in the engine and damage the Lambda probe.
- If the engine starts, runs for a short period and then stops, after fault finding, repairs or component tests, then the fault may lie with the immobilizer which is blocking the engine control unit. The fault memory must be interrogated and if necessary the control unit matched => Page 137 .
- During some checks it is possible that the control unit will recognise and store a fault. Therefore after completing all checks and repairs the fault memory must be interrogated and if necessary erased.
  => Page 9 , interrogating and erasing fault memory
- Vehicles with an airbag are fitted with a crash/fuel shut-off. It reduces the risk of a vehicle burning in the event of a crash in that the fuel pump is switched off by the fuel pump relay. At the same time this device improves the starting of the engine because as soon as the door is opened the fuel pump is activated to build-up pressure in the fuel system.

Safety precautions =>Page 78

Rules for cleanliness => Page 79

Technical data => Page 79

Checking intake system for leaks (unmetered air) => Page 113 .

Checking engine operating mode => Page 128

Protected by copyright. Copying for private or commercial purposes, in part or in whole, is not permitted unless authorised by Volkswagen AG. Volkswagen AG does not guarantee or accept any liability with respect to the correctness of information in this document. Copyright by Volkswagen AG.
satelettronica

## 1.4 - Removing and installing parts of the injection system

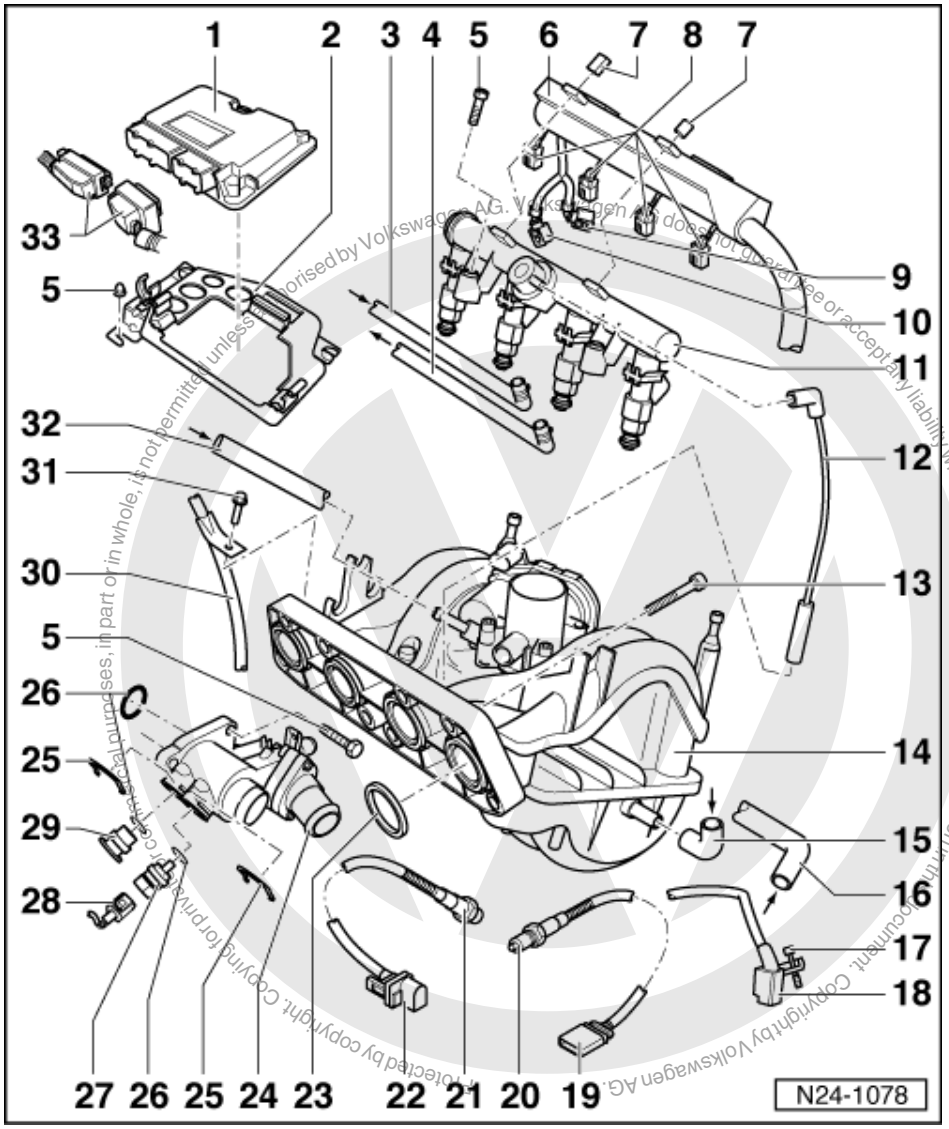


1 Motronic control unit (J220)*

- Fitting location => Page 53 , engine compartment overview
- For injection system, Lambda regulation, activated charcoal filter tank venting valve, knock control, speed governing, ignition and self-diagnosis
- Checking voltage supply => Page 130
- Procedure after voltage supply open circuit => Page 132
- Renew => Page 133
- If replaced carry out basic setting => Page 135
- On replacement, the control unit must be matched to the electronic immobilizer => Page 137

satelettronica

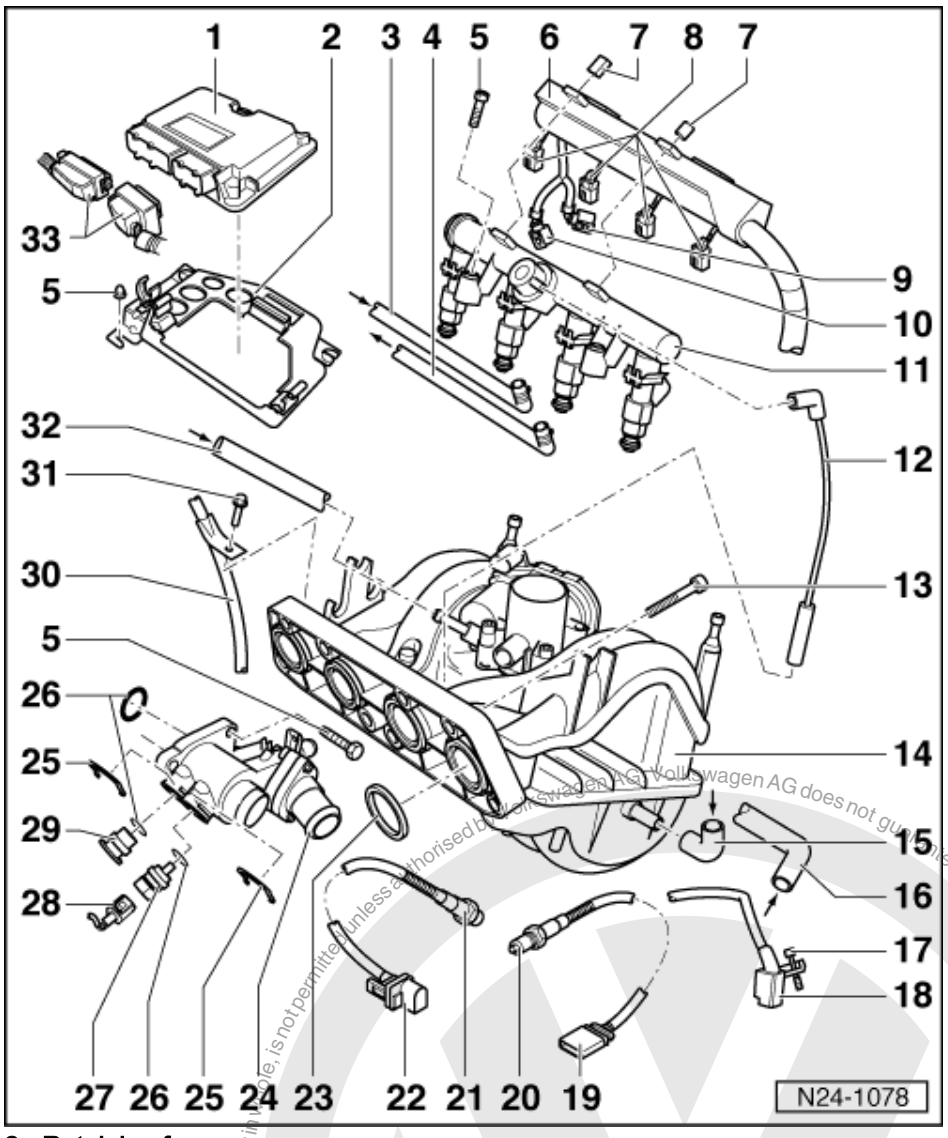


2 Retaining frame

3 Supply hose

- Black with white marks
- Secure with spring-type clips
- Check securely seated
- From fuel filter

=> Repair Group 20; Removing and installing parts of fuel supply system; Removing and installing fuel tank with attachments and fuel filter Removing and installing parts of fuel supply system Removing and installing fuel tank with attachments and fuel filter

4 Return hose

- Blue or with blue marking
- Secure with spring-type clips
- Check securely seated
- To the fuel delivery unit in fuel tank

=> Repair Group 20; Removing and installing parts of fuel supply system; Removing and installing fuel tank with attachments and fuel filter Removing and installing parts of fuel supply system Removing and installing fuel tank with attachments and fuel filter

satelettronica

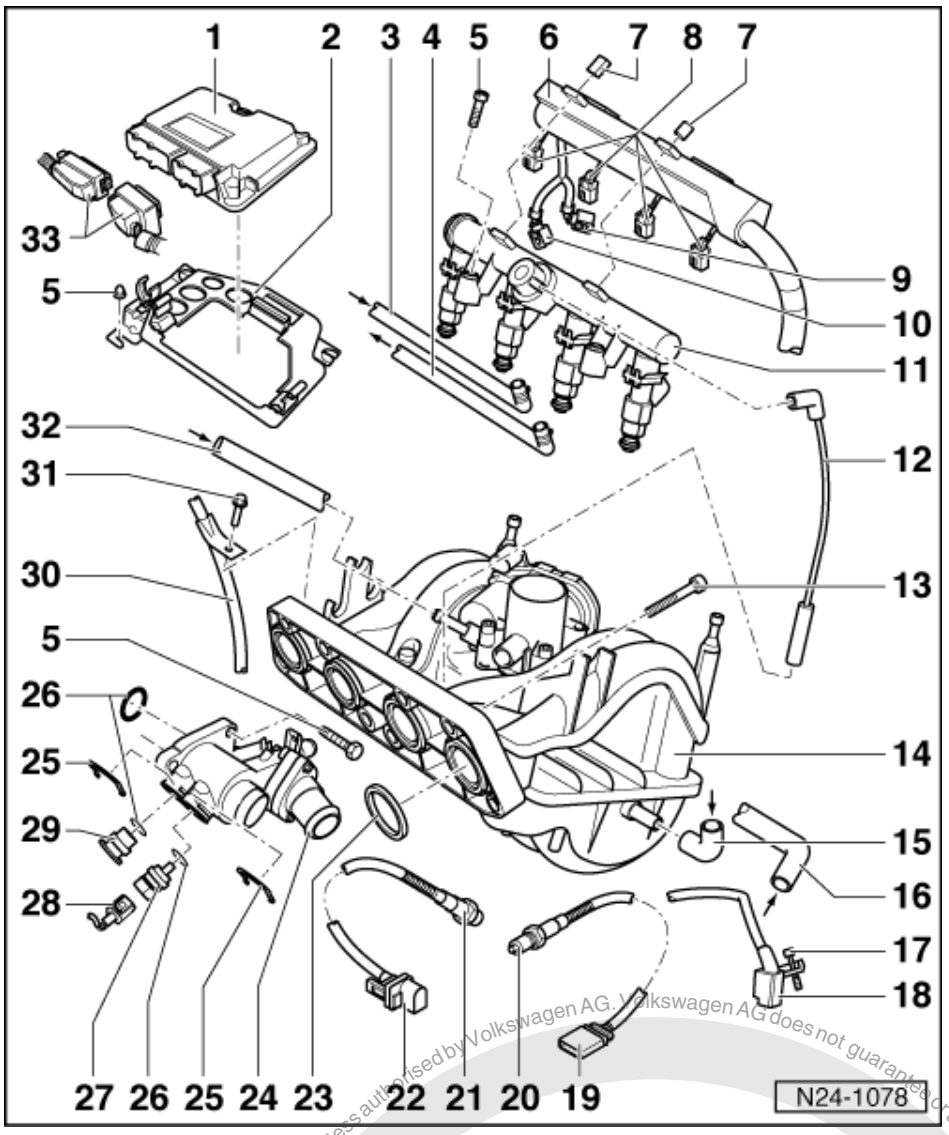


5 10 Nm

6 Cable/line guide
- Clipped onto fuel rail

7 Securing clip
- Note version

8 Connector
- Black, 2-pin
- For injector (N30...N33)

9 Connector
- Black, 6-pin
- For throttle valve control part (J338)
- Connector contacts are gold-plated

10 Connector
- Black, 4-pin
- For intake manifold pressure sender and sender for intake air temperature in intake manifold
- Connector contacts are gold-plated

Protected by copyright. Copying for private or commercial purposes, in part or in whole, is not permitted unless authorised by Volkswagen AG. Volkswagen AG does not guarantee or accept any liability with respect to the correctness of information in this document. Copyright by Volkswagen AG.
satelettronica

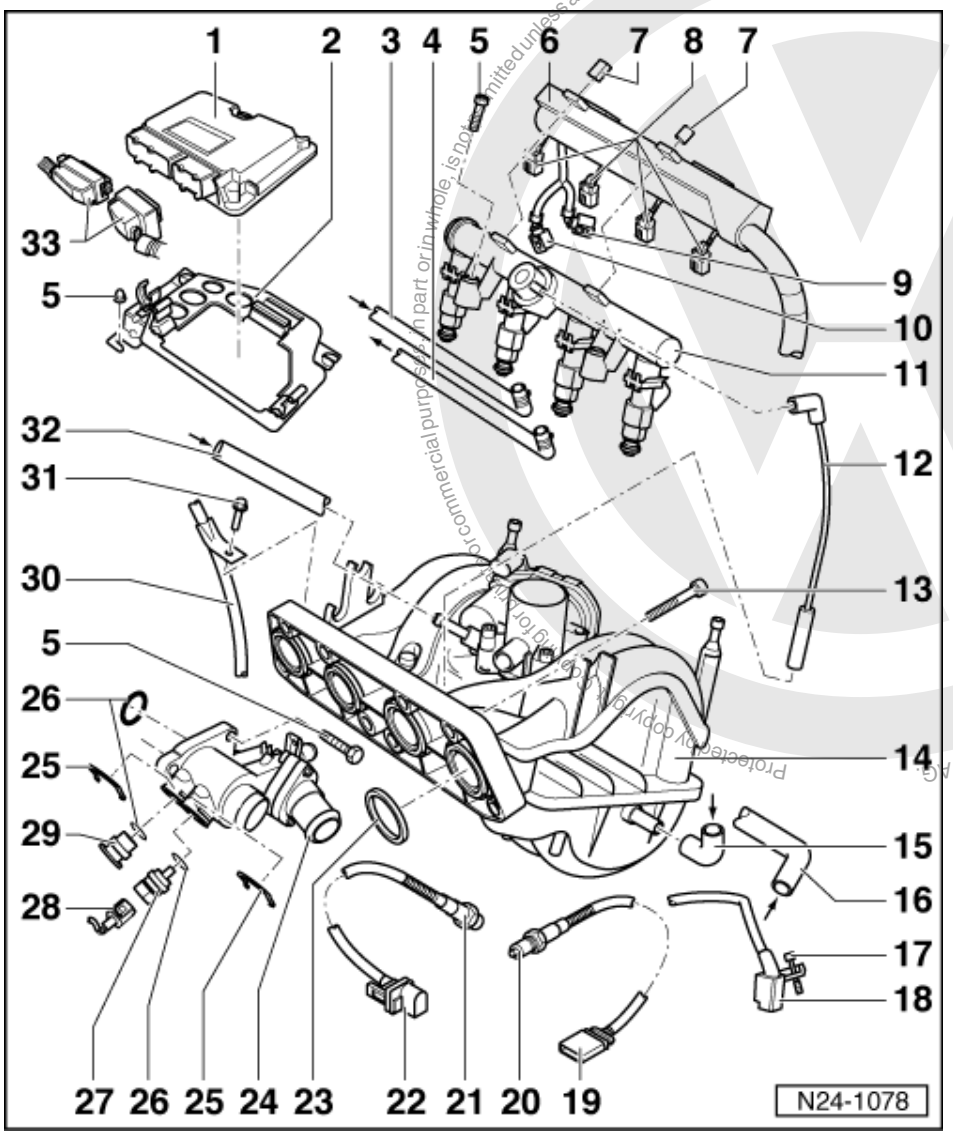


11 Fuel manifold with injectors
- Dismantling and assembling => Page 71

12 Vacuum hose

13 20 Nm

14 Intake manifold
- Dismantling and assembling => Page 71

15 From brake servo

16 From EGR valve (N18)*

17 5 Nm

18 Engine speed sender (G28)*
- Fitting location => Page 53 , fitting location overview
- To remove, remove intake manifold item 14
- Checking => Page 101

satelettronica

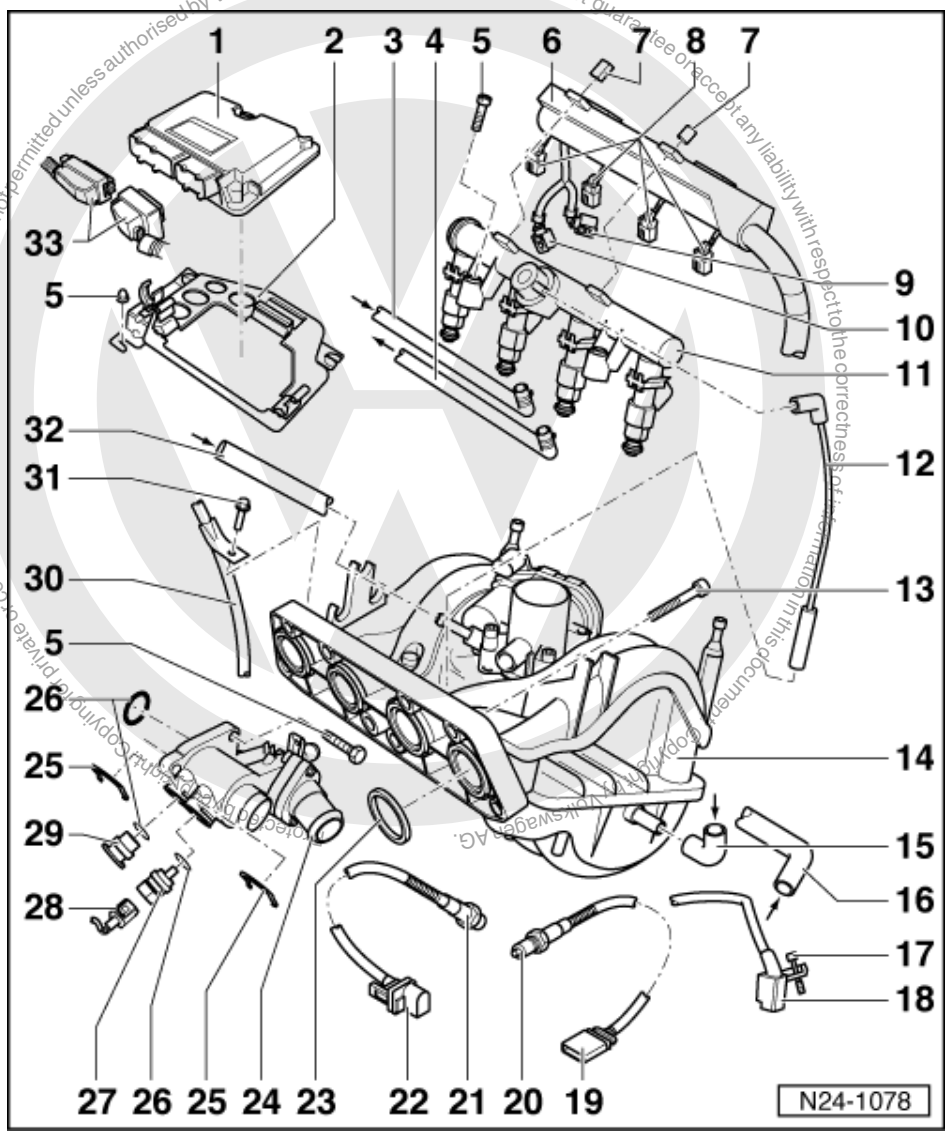


19 Connector

- Only engines fulfilling EU 4 standard
- For Lambda probe 2 after catalyst (G130) and Lambda probe heating (Z29)
- Black, 4-pin
- Contacts 3 and 4 gold plated

20 Lambda probe 2 after catalyst (G130)*, 50Nm

- Only engines fulfilling EU 4 standard
- Fitting location => Page 53 , engine compartment overview
- Grease only the threads with "G 052 112 A3"; "G 052 112 A3" must not get into the slots on the probe body
- Probe heating voltage supply via fuel pump relay (J17)
- Check Lambda probe heating for Lambda probe after catalyst => Page 84
- Check Lambda probe and Lambda regulation after catalyst => Page 123

satelettronica

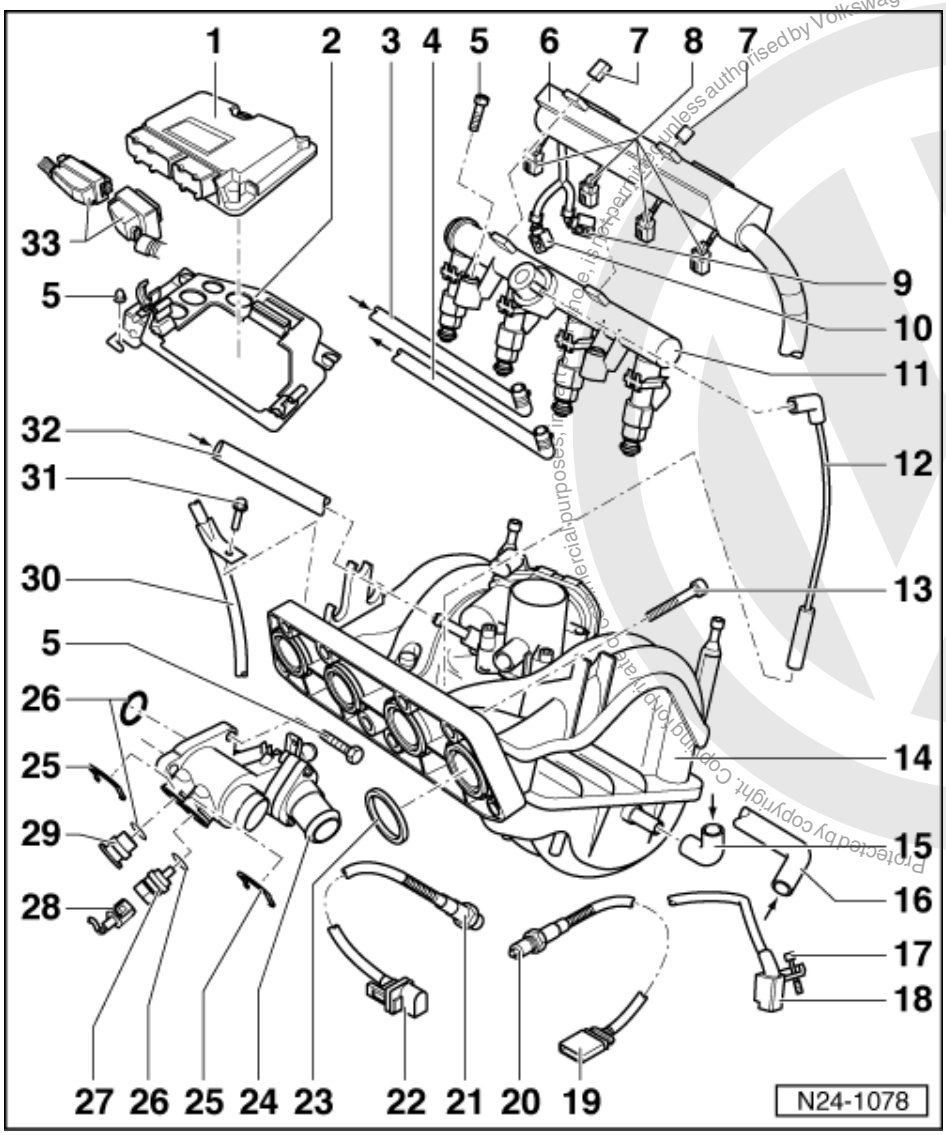


21 Lambda probe 1 before catalyst (G39)*, 50Nm

- Fitting location => Page 53 , engine compartment overview
- Grease only the threads with "G 052 112 A3"; "G 052 112 A3" must not get into the slots on the probe body
- Probe heating voltage supply via fuel pump relay (J17)
- Checking Lambda probe heating before catalyst => Page 80
- Checking Lambda probe and Lambda regulation before catalyst => Page 118
  Engines conforming to EU 4 standard
- Checking Lambda probe ageing Lambda probe 1 => Page 127

Protected by copyright. Copying for private or commercial purposes, in part or in whole, is not permitted unless authorised by Volkswagen AG. Volkswagen AG does not guarantee or accept any liability with respect to the correctness of information in this document. Copyright by Volkswagen AG.
satelettronica

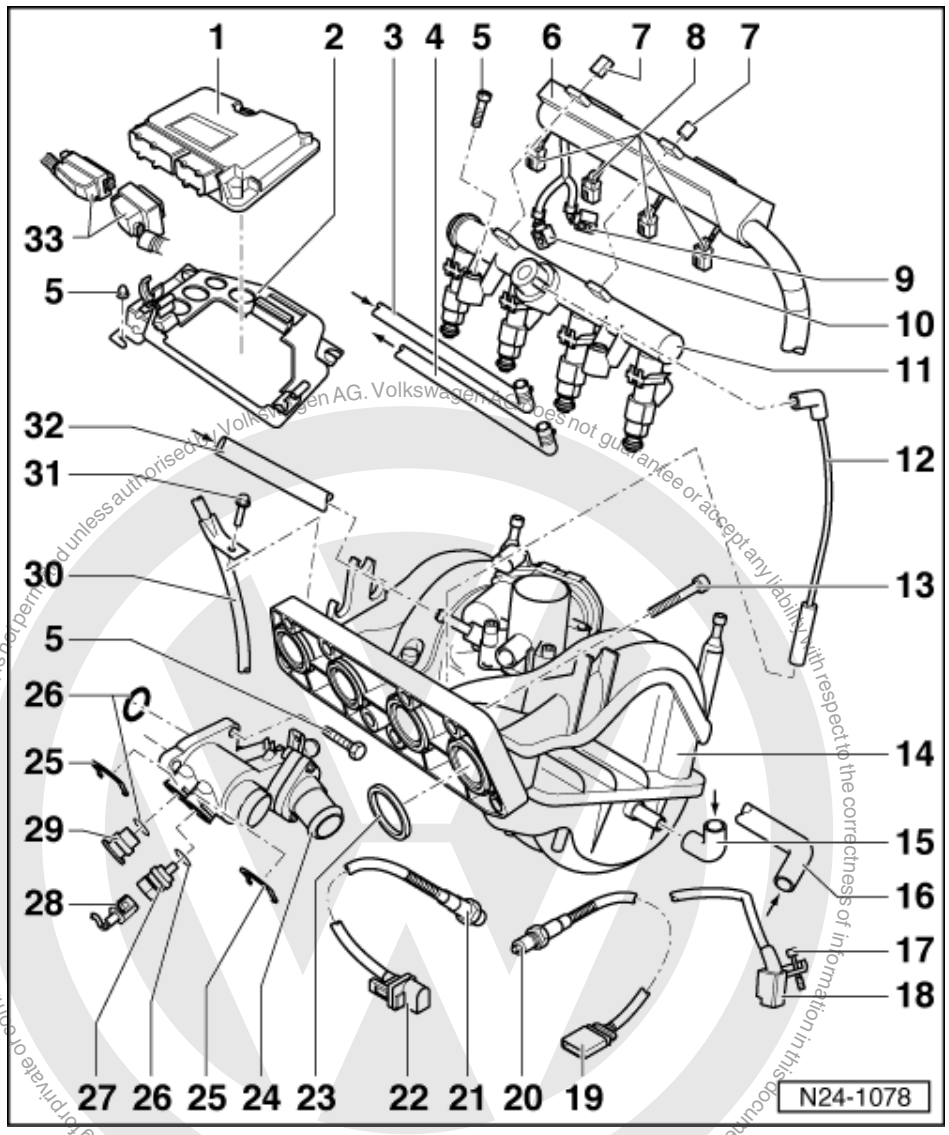


22 Connector

- For Lambda probe 1 before catalyst (G39) and Lambda probe heating (Z19)
  Engines conforming to MVEG II standard
- Black, 4-pin
- Connector contacts 3 and 4 are gold-plated
  Engines conforming to EU 4 standard
- Black, 6-pin
- Contacts gold plated

23 Seal

- Renew

24 Thermostat housing

25 Retaining clip

- Check seated securely

26 O-ring

- Renew if damaged

satelettronica

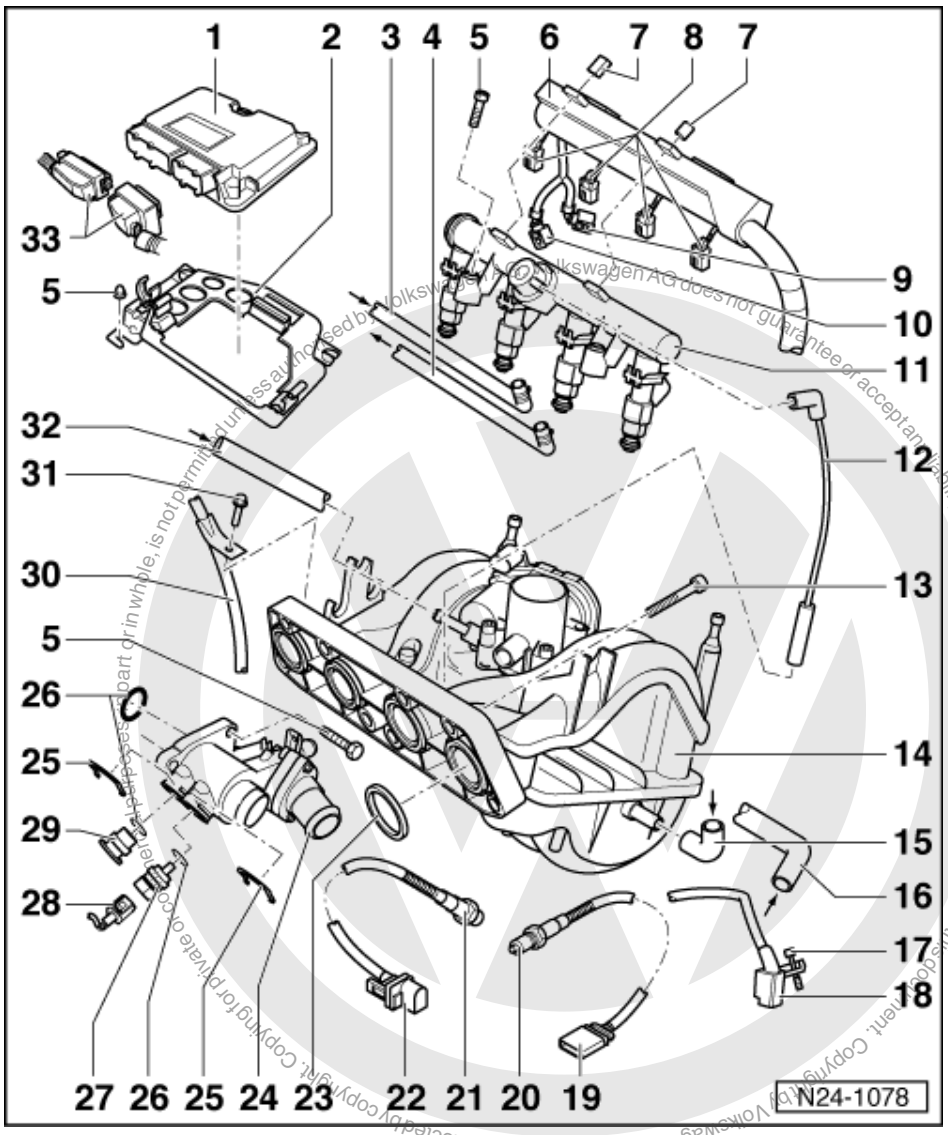


27 Coolant temperature sender (G62)*

- Green
- For engine control unit
- With coolant temperature gauge sender (G2)
- If necessary release pressure in cooling system before removing
- Resistance values between contacts 1 and 3
  =>Page 77 , Fig. 1
- Checking =>Page 96

28 Connector

- Black, 4-pin
- For coolant temperature sender (G62) and coolant temperature gauge sender (G2)

29 Plug

- If necessary release pressure in cooling system before removing

satelettronica

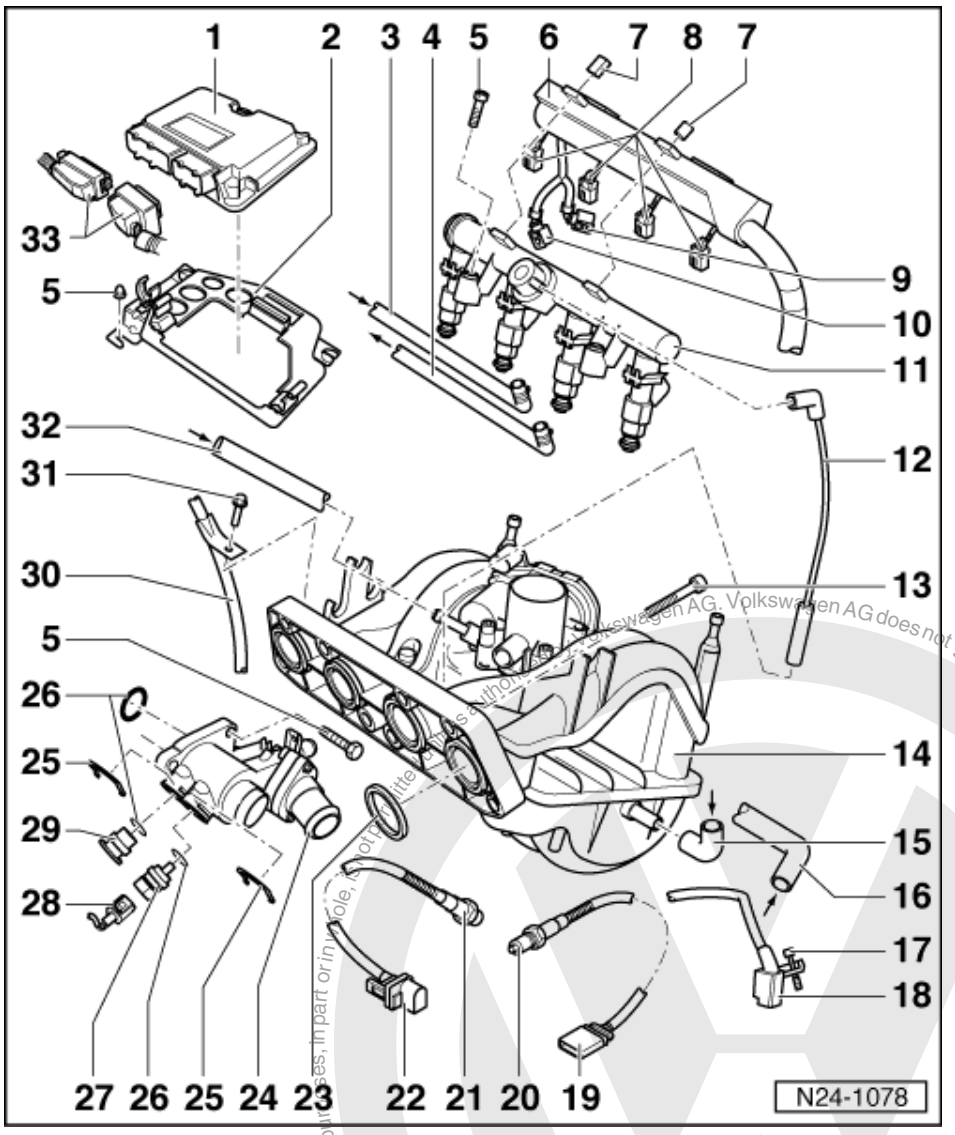


30 Guide tube

- For dipstick

31 6 Nm

- Notes on installing => Page 78

32 Vent pipe

- From tank venting valve in activated charcoal filter:

=> Repair group 20; Activated charcoal filter system Activated charcoal filter system

33 Connector

- Only disconnect or connect with ignition switched off

satelettronica
Volkswagen AG does not guarantee or accept any liability with respect to the correctness of information in this document. Copyright by Volkswagen AG.

## 1.5 - Dismantling and assembling intake manifold

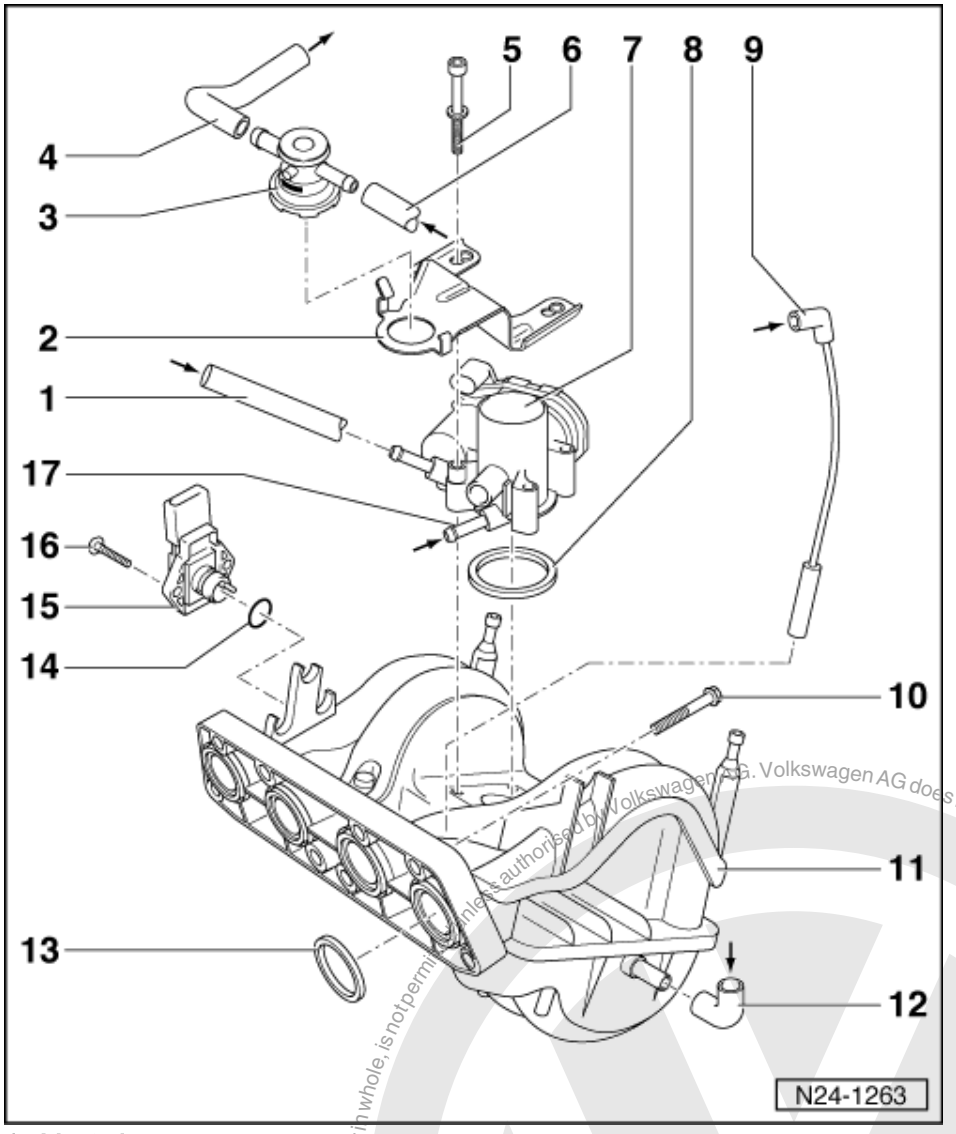


1 Vent pipe
- From tank venting valve in activated charcoal filter:

=> Repair group 20; Activated charcoal filter system Activated charcoal filter system

2 Bracket
3 Vacuum valve
- Checking => Page 114

4 Breather hose
- To throttle valve control part

5 10 Nm
6 Breather hose
- From crankshaft breather housing connection

7 Throttle valve control part (J338)*
- Checking => Page 87
- If replaced match engine control unit => Page 135
- Connector contacts are gold-plated

Protected by copyright. Copying for private or commercial purposes, in part or in whole, is not permitted unless authorised by Volkswagen AG. Volkswagen AG does not guarantee or accept any liability with respect to the correctness of information in this document. Copyright by Volkswagen AG.
satelettronica

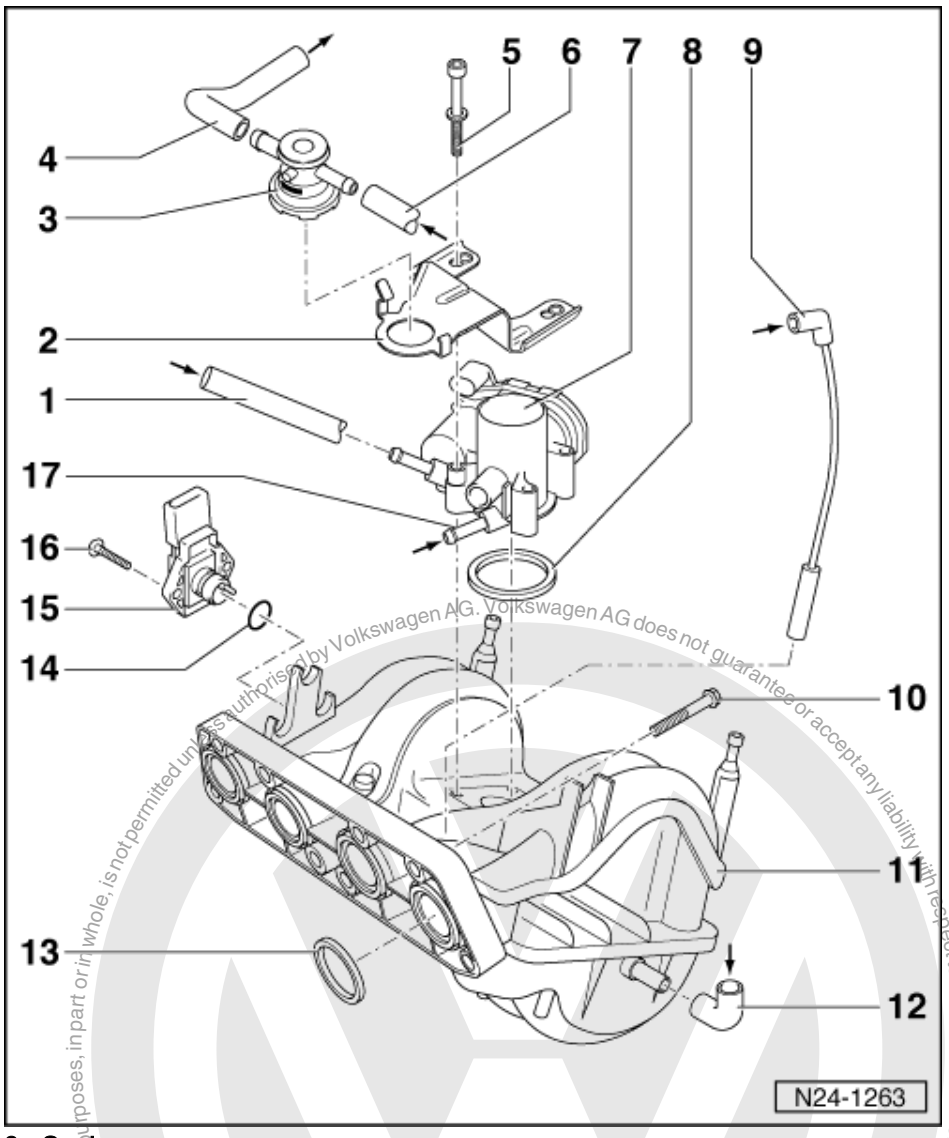


8 Seal
- Renew if damaged

9 Vacuum hose
- From fuel pressure regulator
  => Page 72 , item 6

10 20 Nm

11 Intake manifold
- Removing and installing
  =>Page 59 , removing and installing parts of the injection system

12 From brake servo

13 Seal
- Renew

Protected by copyright. Copying for private or commercial purposes, in part or in whole, is not permitted unless authorised by Volkswagen AG. Volkswagen AG does not guarantee or accept any liability with respect to the correctness of information in this document. Copyright by Volkswagen AG.

satelettronica

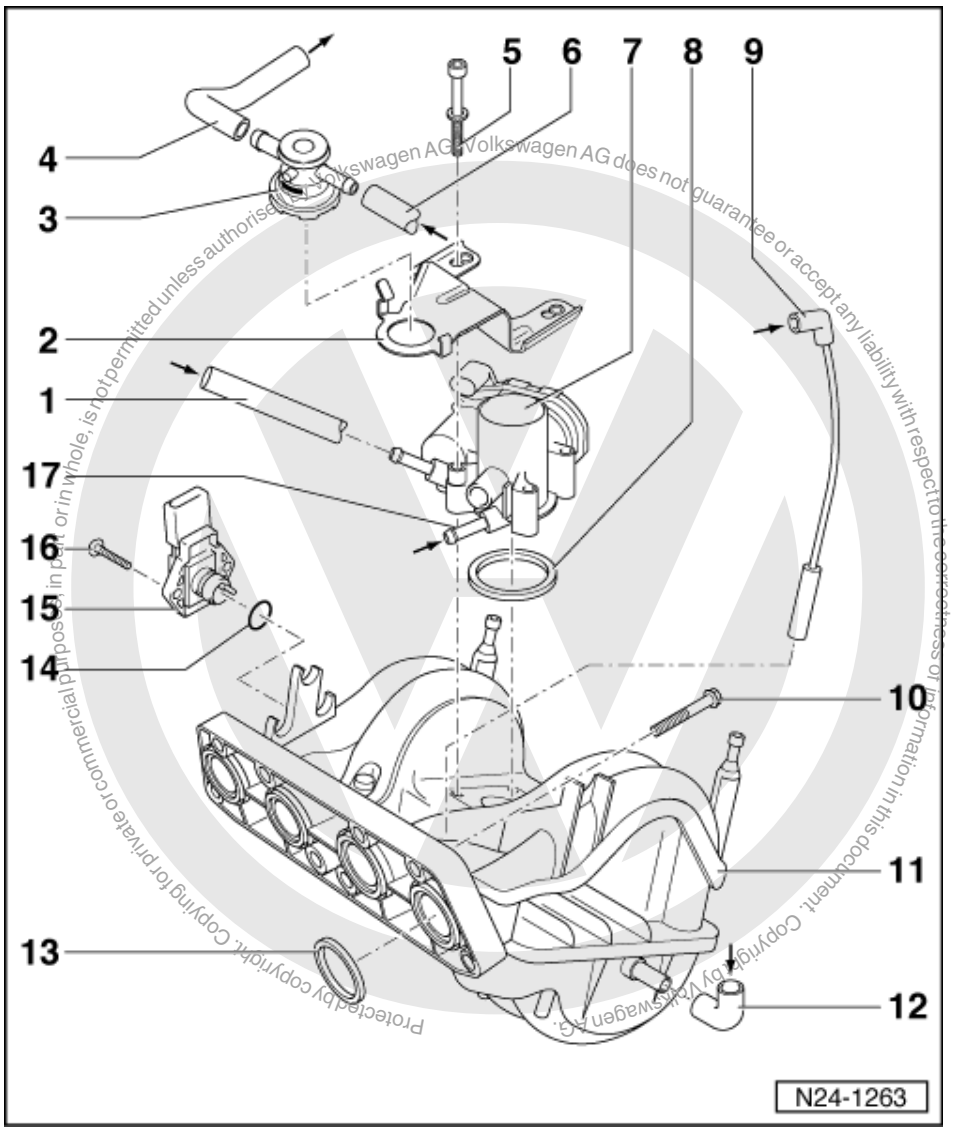


14 O-ring

- Renew if damaged

15 Intake manifold pressure sender (G71)* with intake air temperature sender (G42)*

- Checking intake manifold pressure sender =>Page 91
- Checking intake air temperature sender =>Page 92
- Intake air temperature sender resistance values between contacts 1 and 2=>Page 77 , Fig. 2

16 3 Nm

- Notes on installing => Page 78

17 Connection

satelettronica

## 1.6 - Dismantling and assembling fuel rail with injectors

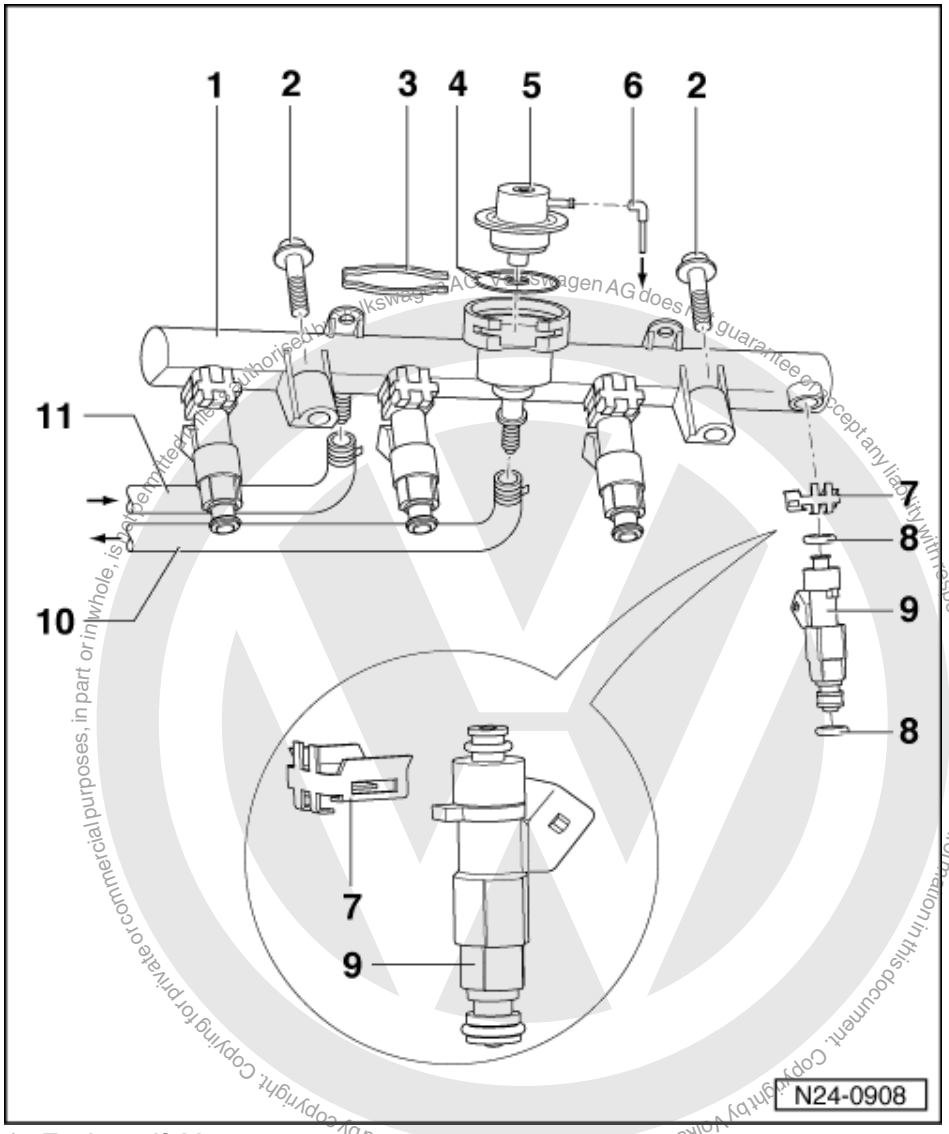


1 Fuel manifold
- Removing and installing
  =>Page 106 , checking spray pattern and injectors for leaks

2 10 Nm

3 Retaining clip
- Check seated securely

4 O-ring
- Renew if damaged
- Before installing moisten with clean engine oil

5 Fuel pressure regulator
- Checking => Page 109 , checking fuel pressure regulator and holding pressure

satelettronica

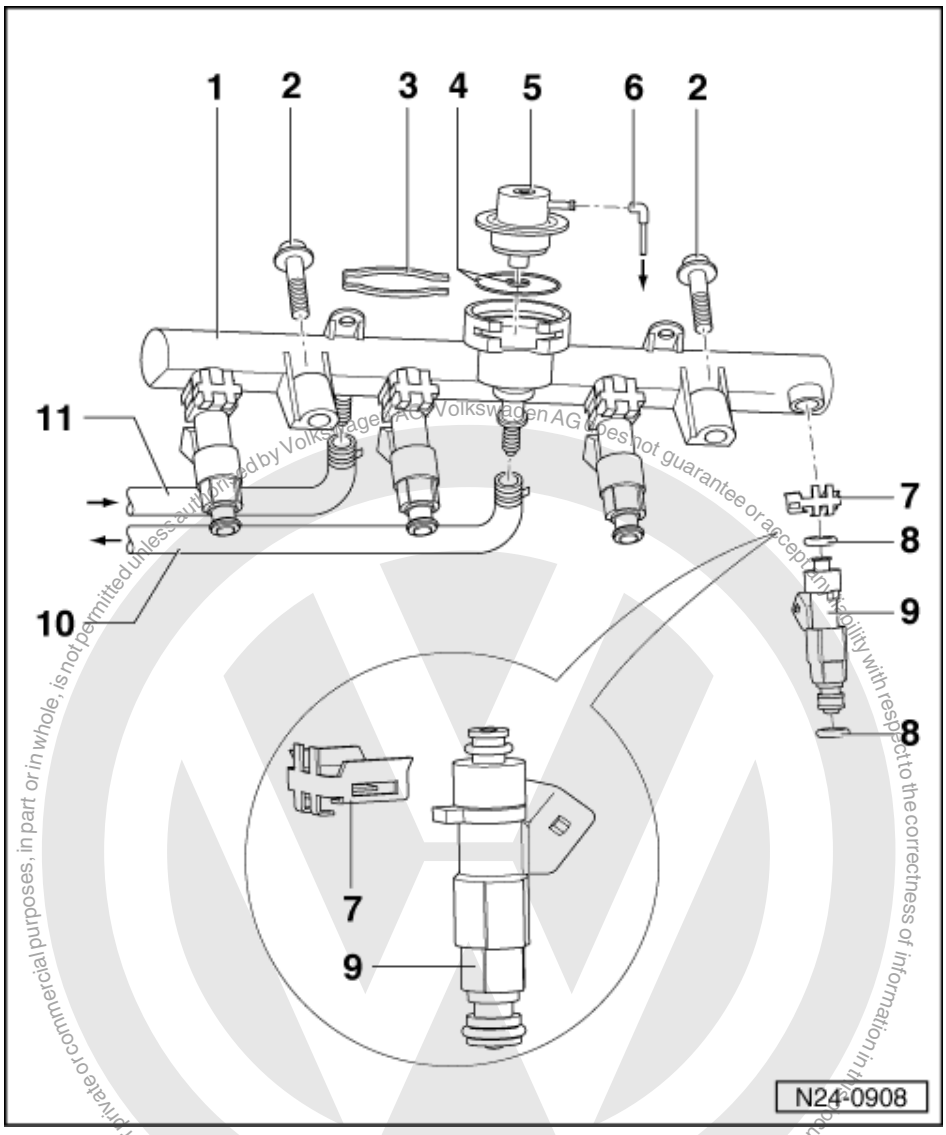


6 Vacuum hose
- To intake manifold => Page 69 , item 9

7 Retaining clip
- Ensure seated correctly at injector and fuel rail

8 O-ring
- Renew
- Before installing moisten with clean engine oil

9 Injectors (N30...N33)*
- Checking => Page 103
- Resistance 12...17 ω

satelettronica

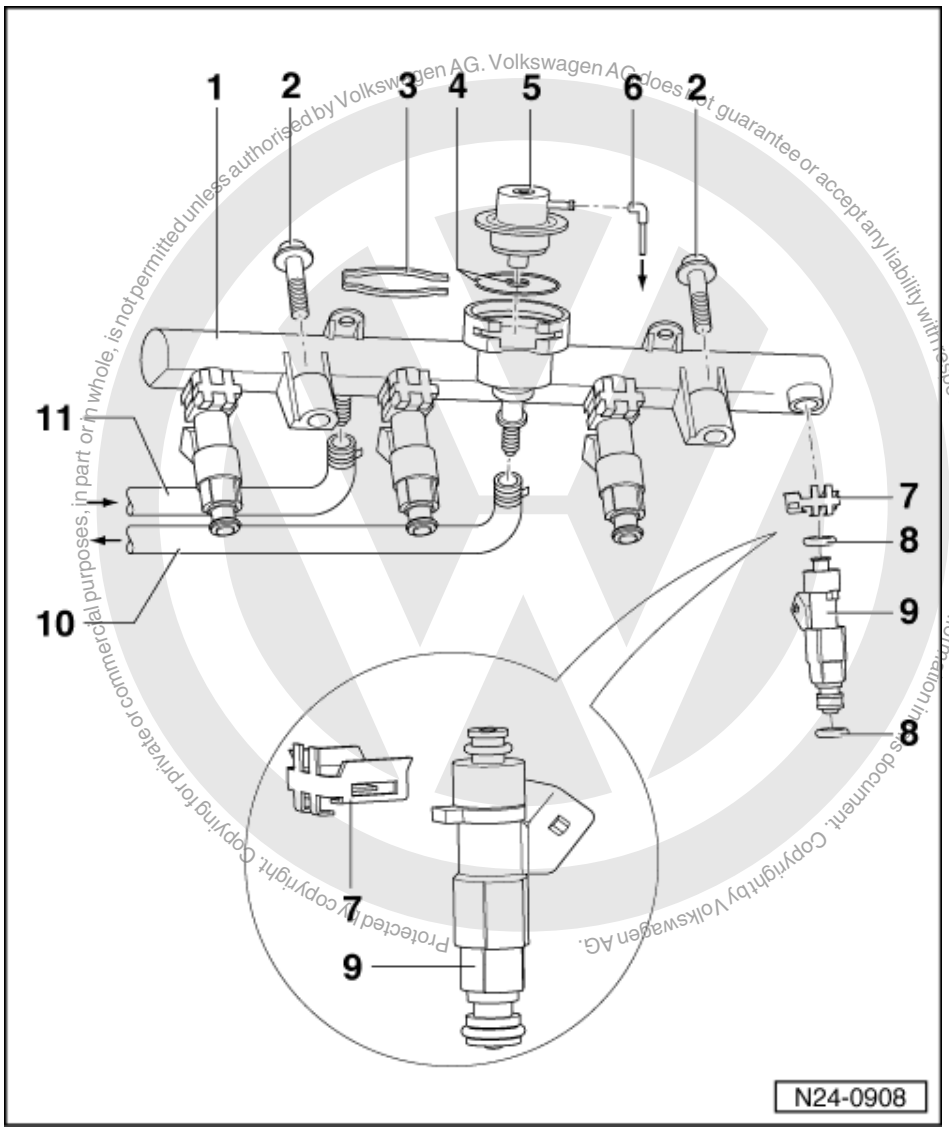


Volkswagen AG. Volkswagen AG does not guarantee or accept any liability with respect to the correctness of information in this document. Copyright by Volkswagen AG. Protected by copyright. Copying for private or commercial purposes, in part or in whole, is not permitted unless authorised by Volkswagen AG.

10 Return hose

- Blue or with blue marking
- Secure with spring-type clips
- Check securely seated
- To the fuel delivery unit in fuel tank

=> Repair Group 20; Removing and installing parts of fuel supply system; Removing and installing fuel tank with attachments and fuel filter Removing and installing parts of fuel supply system Removing and installing fuel tank with attachments and fuel filter

11 Supply hose

- Black with white marks
- Secure with spring-type clips
- Check securely seated
- From fuel filter:

=> Repair Group 20; Removing and installing parts of fuel supply system; Removing and installing fuel tank with attachments and fuel filter Removing and installing parts of fuel supply system Removing and installing fuel tank with attachments and fuel filter

satelettronica

## 1.7 - Dismantling and assembling air cleaner

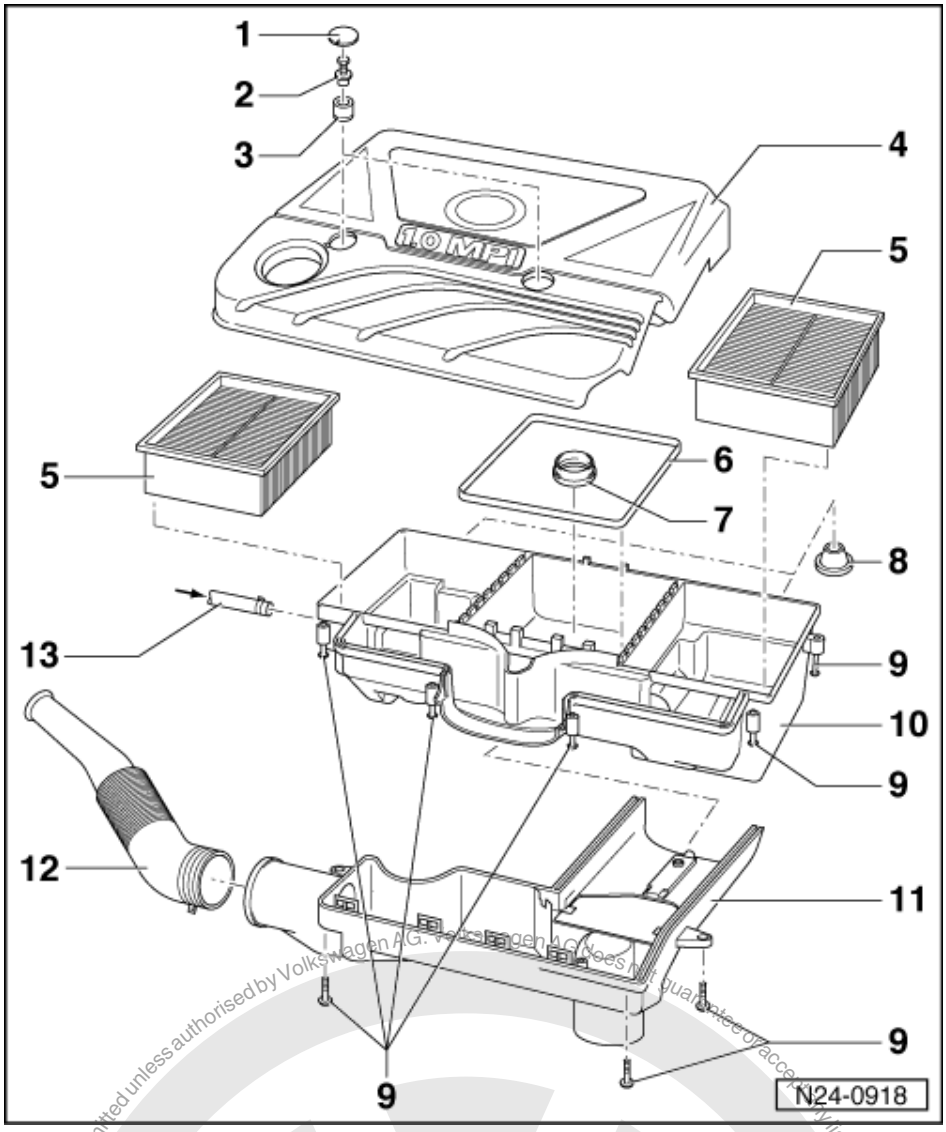


Removing and installing air cleaner => Page 77 , Fig. 3

1 Plug
- Renew if damaged

2 Hexagon bolt, 10 Nm
- With guide for spacer

3 Spacer sleeve

4 Air cleaner upper part

5 Filter element

6 Gasket
- Note installation position
- Renew if damaged

Protected by copyright. Copying for private or commercial purposes, in part or in whole is not permitted unless authorised by Volkswagen AG. Volkswagen AG does not guarantee or accept any liability with respect to the correctness of information in this document. Copyright by Volkswagen AG.

satelettronica

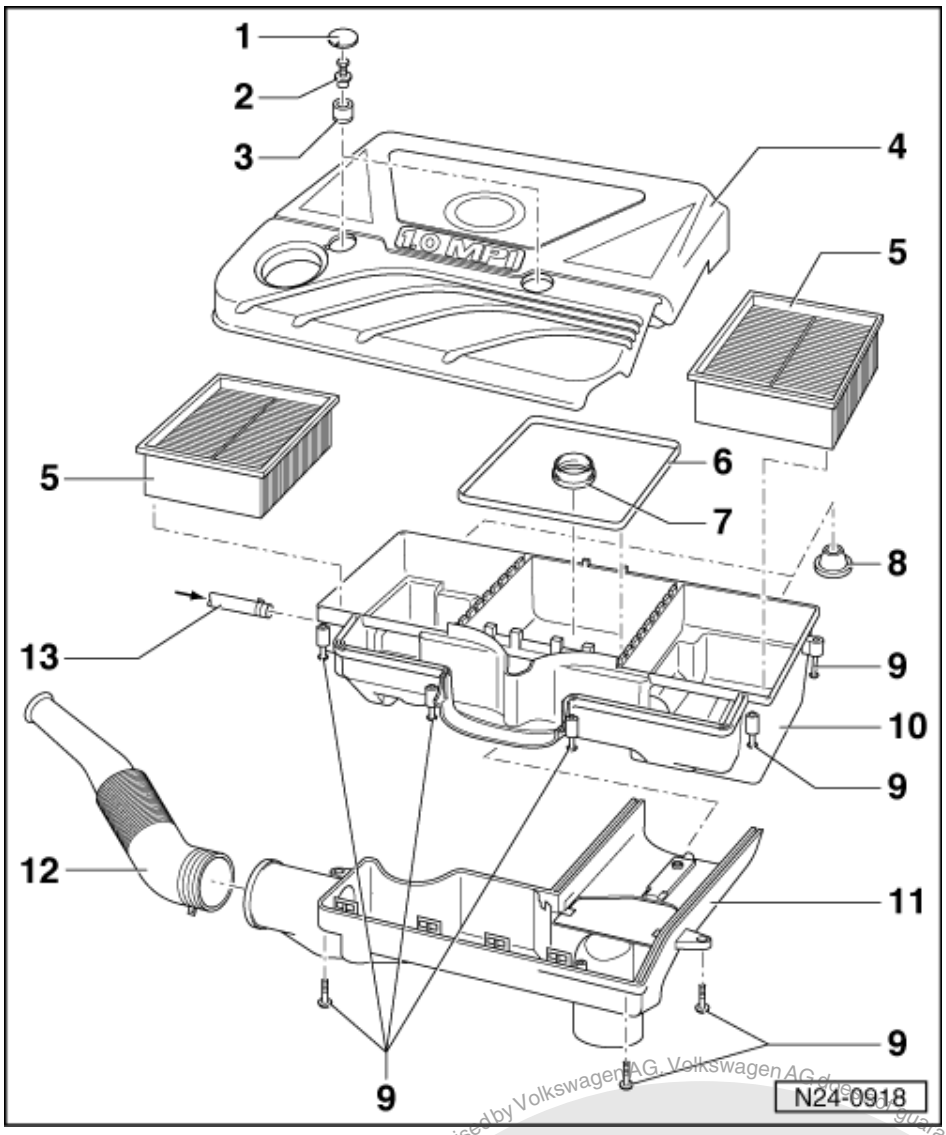


7 Seal
- Check securely seated
- Renew if damaged

8 Stop
- Check securely seated
- Renew if damaged

9 3 Nm
- Notes on installing => Page 78

10 Air cleaner lower part

11 Air intake housing with regulating flap
- Check intake air preheating => Page 114

12 Connecting piece for cold air intake
- Note installation position

satelettronica
Protected by copyright. Copying for private or commercial purposes, in part or in whole, is not permitted unless authorised by Volkswagen AG. Volkswagen AG does not guarantee or accept any liability with respect to the correctness of information in this document. Copyright by Volkswagen AG.

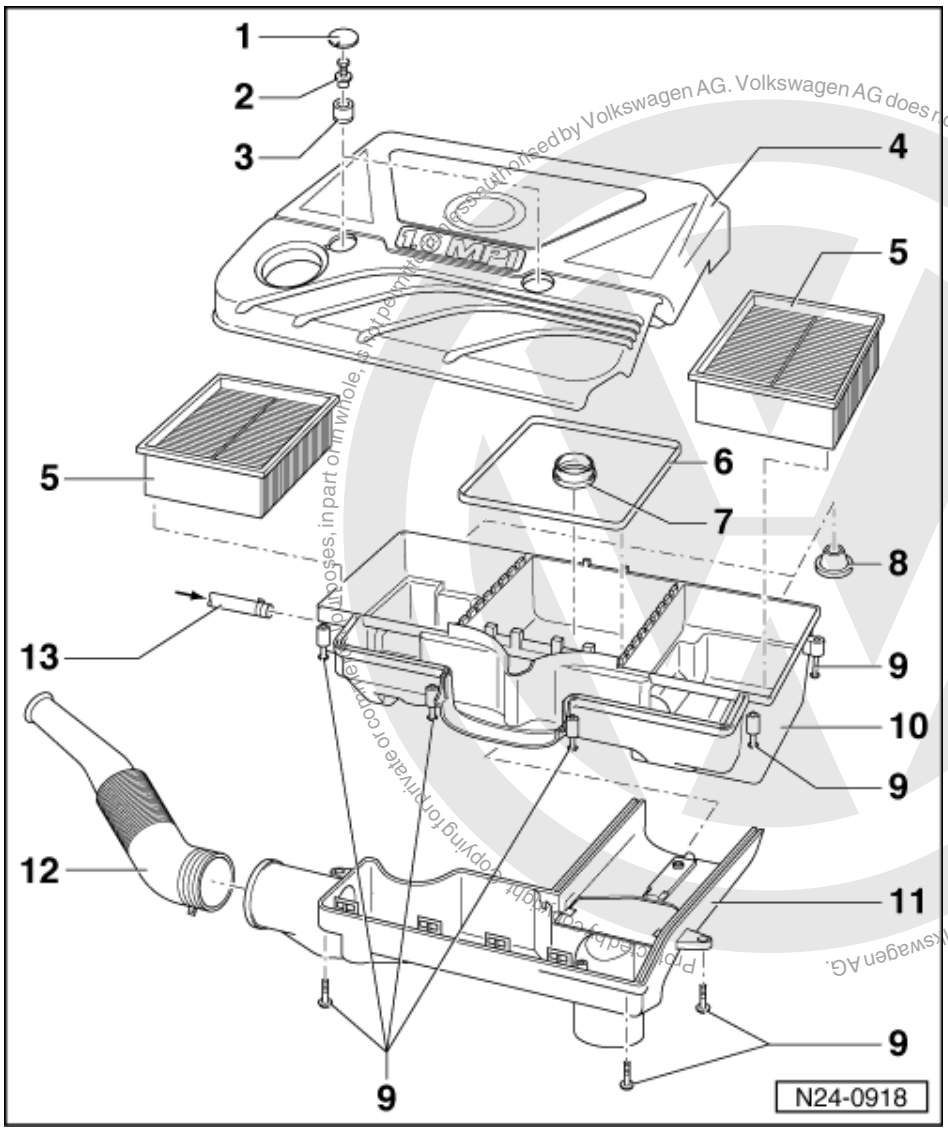


13 Crankcase breather hose

- From oil separator:

=> Repair group 17; Removing and installing parts of lubrication system Removing and installing parts of lubrication system

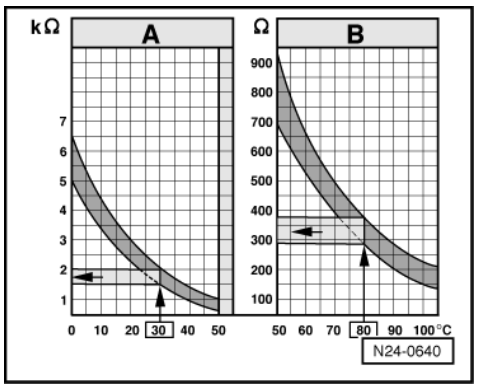


satelettronica

Protected by copyright. Copying for private or commercial purposes, in part or in whole, is not permitted unless authorised by Volkswagen AG. Volkswagen AG does not guarantee or accept any liability with respect to the correctness of information in this document. Copyright by Volkswagen AG.

-> Fig. 1 Resistance values for coolant temperature sender (G62)

The diagram is divided into two temperature ranges:

A - From 0...50 °C
B - From 50...105 °C

Examples:

- 30 °C is in range A and corresponds to a resistance of 1.5...2.0 kω
- 80 °C is in range B and corresponds to a resistance of 275...375 ω

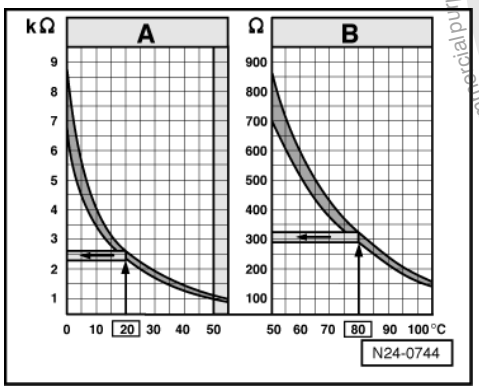


-> Fig.2 Resistance values for intake air temperature sender (G42)

The diagram is divided into two temperature ranges:

A - From 0...50 °C
B - From 50...105 °C

Examples:

- 20 °C is in range A and corresponds to a resistance of 2.3...2.6 kω
- 80 °C is in range B and corresponds to a resistance of 290...330 ω

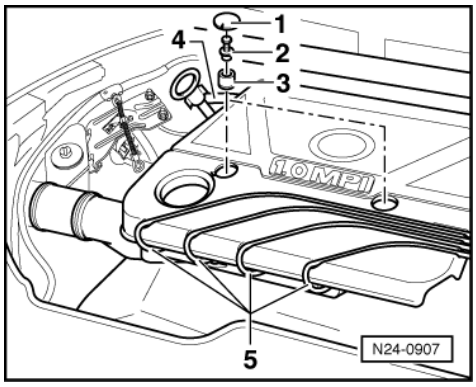


-> Fig. 3 Removing and installing air cleaner

Removing

- Pull cold air intake hose off air cleaner upper part.
- Remove plugs -1-.
- Remove securing screws -2-.
- Pull crankcase breather hose -4- off air cleaner housing.
- Pull off EGR valve venting hose.

satelettronica

- Unclip ignition cables -5- out of air cleaner upper part.
- Remove air cleaner.

Installing

- Installing the air cleaner is carried out in the reverse order.

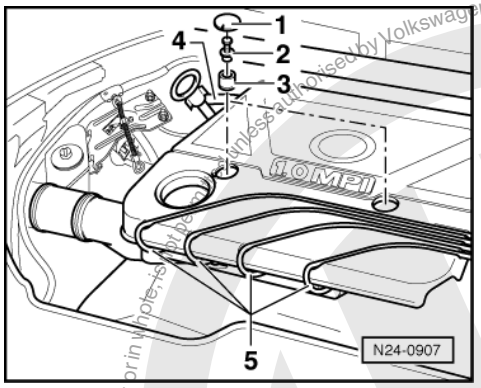


- -> Tighten securing screws -2- to 10 Nm.
  (Ensure that the spacer sleeves -3- are first fitted into the air cleaner upper part.)
- Ensure that the ignition cables -5- are laid so that the loops of the cables do not touch the air cleaner housing.

***Notes:***

*When installing, ensure that the connecting pipe over the warm air intake is not touching body work.*

*To secure the air cleaner lower part to the air cleaner upper part self tapping screws are used. If these screws are loosened or tightened with a power tool the thread in the air cleaner upper or lower parts can be damaged.*

*For this reason the use of a power tool can only be used when:*

- The maximum speed of the power tool is 300 rpm.
- The tightening torque is set to a maximum of 6 Nm.

Protected by copyright. Copyright by Volkswagen AG. Volkswagen AG does not guarantee or accept any liability with respect to the correctness of information in this document. Copyright by Volkswagen AG.
Protected by copyright. Copyright by Volkswagen AG. Volkswagen AG does not guarantee or accept any liability with respect to the correctness of information in this document. Copyright by Volkswagen AG.
Protected by copyright. Copyright by Volkswagen AG. Volkswagen AG does not guarantee or accept any liability with respect to the correctness of information in this document. Copyright by Volkswagen AG.
Protected by copyright. Copyright by Volkswagen AG. Volkswagen AG does not guarantee or accept any liability with respect to the correctness of information in this document. Copyright by Volkswagen AG.
satelettronica

## 1.8 - Safety precautions

Warning!
The fuel system is pressurized! Before loosening hose connections or opening the test connection, wrap a cloth around the connection. Then release pressure by carefully pulling off the hose or carefully unscrewing sealing plug.

To prevent injuries to persons and/or damage to the fuel injection and ignition system, the following must be noted:

- For safety reasons the fuse No. 40 must be removed from the fuse holder before opening the fuel system, otherwise the fuel pump can be activated by the door contact switch.
- Do not touch or disconnect ignition wiring when the engine is running or being turned at starter speed.
- The ignition must be switched off before connecting or disconnecting injection or ignition system wiring or tester cables.

Observe following if test and measuring instruments are required during a test drive:

- Test and measuring instruments must be secured to rear seat and operated by a 2nd person from this location.

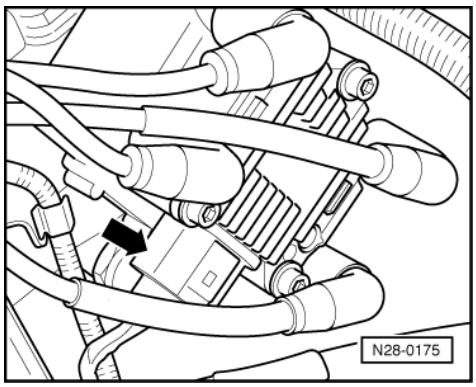


If test and measuring instruments are operated from front passenger's seat and the vehicle is involved in an accident, there is a possibility that the person sitting in this seat may receive serious injuries when the airbag is triggered.

- If the engine is to be turned at starter speed, without starting:

- -> Pull 4 pin connector off ignition transformer -arrow-.

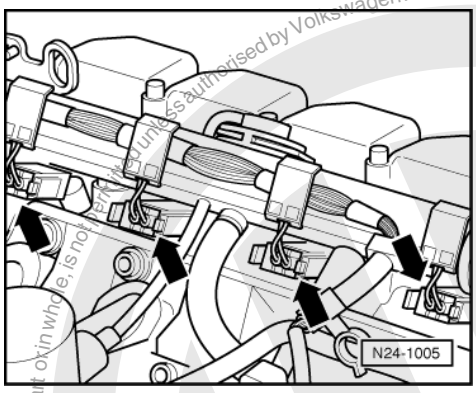


- -> Pull plug -arrows- off all injectors.

## 1.9 - Rules for cleanliness

When working on the fuel supply/injection system, pay careful attention to the following "5 rules":

- Thoroughly clean all unions and the adjacent areas before disconnecting.
- Place parts that have been removed on a clean surface and cover. Do not use fluffy cloths!
- Carefully cover opened components or seal, if the repair cannot be carried out immediately.
- Only install clean components:
  Only unpack replacement parts immediately prior to installation.
  Do not use parts that have been stored loose (e.g. in tool boxes etc.).
- When the system is open:
  Do not work with compressed air if this can be avoided.
  Do not move vehicle unless absolutely necessary.

## 1.10 - Technical data

| Engine codes | AKK | AKP | ALD |
|---|---|---|---|
| Idling speed check<br>Idling speed 2) rpm | 600...8001) | 600...8001) | 600...8001) |
| Engine control unit 3) | | | |

Protected by copyright. Copying for private or commercial purposes, in part or in whole, is not permitted unless authorised by Volkswagen AG. Volkswagen AG does not guarantee or accept any liability with respect to the correctness of information in this document. Copyright by Volkswagen AG.
satelettronica

| Engine codes | AKK | AKP | ALD |
|---|---|---|---|
| System<br>Part number | Motronic ME7.5.10<br>=>Parts film | Motronic ME7.5.10<br>=>Parts film | Motronic ME7.5.10<br>=>Parts film |
| Governed speed rpm | from approx. 5700 | from approx. 5700 | from approx. 5700 |

1) Up-to-date specifications:

=> Exhaust emissions test binder

2) Not adjustable

3) Replacing engine control unit => Page 133

| Engine codes | AUC | AUD |
|---|---|---|
| Idling speed check<br>Idling speed2) rpm | 600...8001) | 600...8001) |
| Engine control unit3)<br>System<br>Part number | Motronic ME7.5.10<br>=>Parts film | Motronic ME7.5.10<br>=>Parts film |
| Governed speed rpm | from approx. 5700 | from approx. 5700 |

1) Up-to-date specifications:

=> Exhaust emissions test binder

2) Not adjustable

3) Replacing engine control unit => Page 133

# 2 - Checking components

## 2.1 - Checking components

## 2.2 - Checking Lambda probe heating before catalyst

**Special tools, workshop equipment, testers, measuring instruments and auxiliary items required**

- Fault reader V.A.G 1551 or vehicle system tester V.A.G 1552 with cable V.A.G 1551/3A
- Test box V.A.G 1598/22
- Hand multimeter V.A.G 1526 or multimeter V.A.G 1715

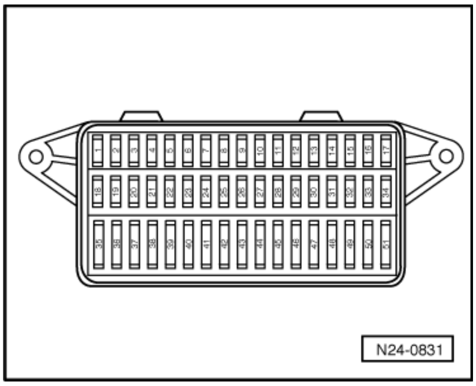


Protected by copyright. Copying for private or commercial purposes, in part or in whole, is not permitted unless authorised by Volkswagen AG. Volkswagen AG does not guarantee or accept any liability with respect to the correctness of information in this document. Copyright by Volkswagen AG.
sateletronica

- Adapter set V.A.G 1594
- Current flow diagram

Check conditions

- -> Fuse No. 1 must be OK.
- The battery voltage must be at least 11.5 V.
- Fuel pump relay must be OK

Test sequence

- Connect fault reader V.A.G 1551 (V.A.G 1552). Start engine and select "Address word" 01 of engine control unit. When doing this the engine must be running at idling speed.
  (Connecting fault reader and selecting engine control unit => Page 4 .)

-> Indicated on display:

```
Rapid data transfer      HELP
Select function XXX
```

- Press keys 0 and 8 for the function "Read measured value block" and confirm entry with Q key.

-> Indicated on display:

```
Read measured value block
Input display group number XXX
```

- Press keys 0, 4 and 1 for "Display group number 41" and confirm entry with Q key.

-> Indicated on display:
(1...4 = Display zones)

```
Read measured value block 41
     1     2     3     4
```

- Check status of Lambda probe heating before catalyst in display zone 2:
  Display: Htg.bC.ON

*Note:*

*The Lambda probe heating may be switched on or off depending on the operating mode of the engine, therefore the display in display zone 2 may show "Htg.bC.ON or alternating from Htg.bC.ON to Htg.bC.OFF.*

If the specification is obtained:

- Press ⇒key.
- Press keys 0 and 6 for the function "End output" and confirm entry with the Q key.
- Switch off ignition.

If the specification is not obtained:

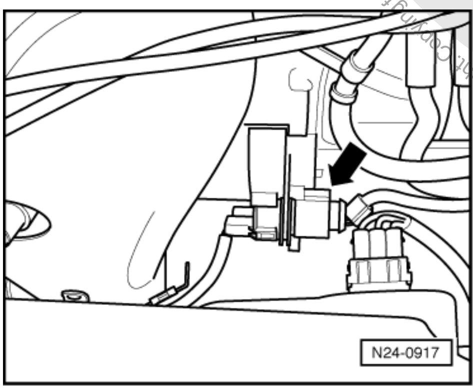


Protected by copyright. Copying for private or commercial purposes, in part or in whole, is not permitted unless authorised by Volkswagen AG. Volkswagen AG does not guarantee or accept any liability with respect to the correctness of information in this document. Copyright by Volkswagen AG.

sateletronica

Only engines which conform to EU 4 standard (engine code AKP, AUC, AUD)

Engines conforming to MVEG II standard (engine code AKK, ALD) => Page 83 .

- -> Separate 6-pin connector (black) to Lambda probe before catalyst (G39) -arrow-.

Checking voltage supply

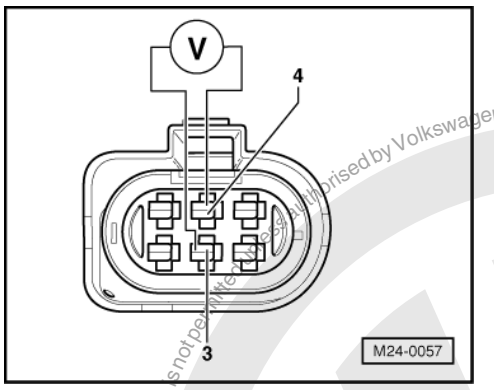


- -> Connect the Multimeter with aux. cables from V.A.G 1594 to measure voltage on contacts 3 + 4 (connector to engine control unit).
- Start engine and run at idling speed.
- Measure the voltage supply:
  When display group 41, display zone 2 displays
  Display: Htg.bC.ON:
  Specification: 11.0...14.5 V
  Display: Htg. bC.ON/Htg.bC.OFF (alternating)
  Specification: Between 0.0...12.0 V fluctuating
- Press ⇒key.
- Press keys 0 and 6 for the function "End output" and confirm entry with the Q key.
- Switch off ignition.

If no voltage is present:

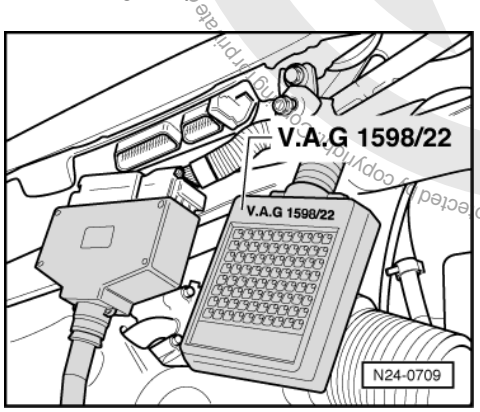


- Remove wiper arms and cowl panel:

=> Electrical system; Repair group 92; windscreen wiper system; removing and installing windscreen wiper system windscreen wiper system removing and installing windscreen wiper system

- -> Connect test box V.A.G 1598/22 to control unit wiring harness.

Protected by copyright. Copying for private or commercial purposes, in part or in whole, is not permitted unless authorised by Volkswagen AG. Volkswagen AG does not guarantee or accept any liability with respect to the correctness of information in this document. Copyright by Volkswagen AG.
satelettronica

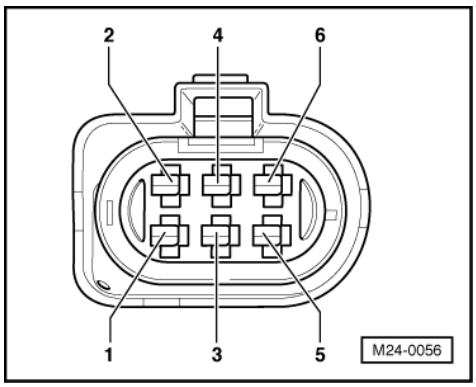


- -> Check wire between test box and 6-pin connector (connector to control unit) for open circuit using current flow diagram.
  Contact 4+socket 1
  Wire resistance: max. 1.5 ω

If the specification is obtained:

- Check wire between 6-pin connector contact 3 and fuel pump relay (J17) for open circuit using current flow diagram.
  Wire resistance: max. 1.5 ω

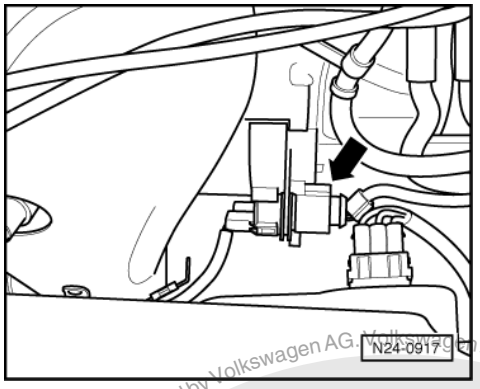


Only engines conforming to MVEG II standard (engine codes AKK, ALD)

- -> Separate 4-pin connector (black) to Lambda probe before catalyst (G39) -arrow-.

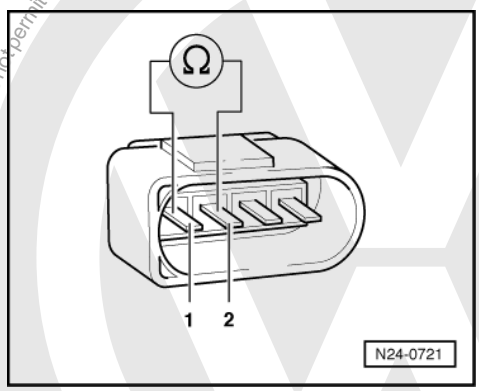


- -> Check probe heating for continuity at Lambda probe connector contacts 1 and 2.

***Note:***

*The heater element resistance is approx. 1...5 ω at room temperature. Even slight increases in room temperature increase the resistance greatly.*

Protected by copyright. Copying for private or commercial purposes, in part or in whole, is not permitted unless authorised by Volkswagen AG. Volkswagen AG does not guarantee or accept any liability with respect to the correctness of information in this document. Copyright by Volkswagen AG.
satelettronica

If it is determined that probe heating has an open circuit:

- Renew Lambda probe before catalyst (G39)
  =>Page 56 , item 16 .

If probe heating has continuity:

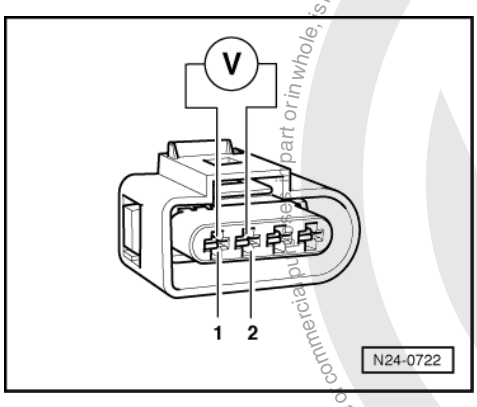


Checking voltage supply

- Set multimeter to "Voltage measurement" range.
- -> Connect multimeter using aux. cables from V.A.G 1594 to measure voltage at contacts 1+2 (connector to engine control unit).
- Start engine and run at idling speed.
  Specification: 11.0...15.0 V
- Switch off ignition.

If no voltage is present:

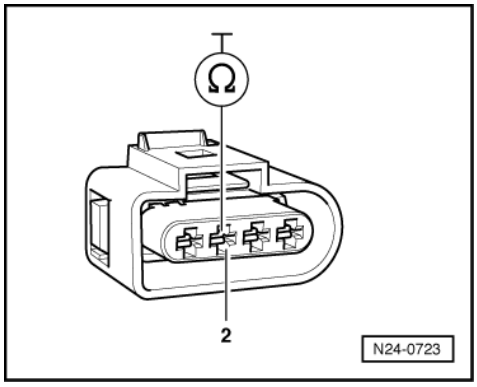


- -> Check wiring between 4 pin connector contact 2 and engine earth for open circuit
  Wire resistance: Max. 1.5 ω

If the specification is obtained:

- Check wire between 4 pin connector contact 1 and fuel pump relay (J17) for open circuit using current flow diagram.
  Wire resistance: max. 1.5 ω

## 2.3 - Checking Lambda probe heating after catalyst

Only engines which conform to EU 4 standard (engine code AKP, AUC, AUD)

Special tools, workshop equipment, testers, measuring instruments and auxiliary items required

- Test box V.A.G 1598/22

Protected by copyright. Copyright by Volkswagen AG. Volkswagen AG does not guarantee or accept any liability with respect to the correctness of information in this document. Copyright by Volkswagen AG. Reproduction, publication or distribution in part or in whole, is not permitted unless authorised by Volkswagen AG.
satelettronica

- Fault reader V.A.G 1551 or vehicle system tester V.A.G 1552 with cable V.A.G 1551/3A
- Hand multimeter V.A.G 1526 or multimeter V.A.G 1715
- Adapter set V.A.G 1594

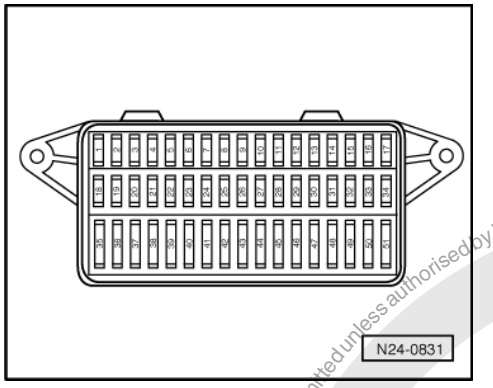


- Current flow diagram

### Check conditions

- -> Fuse No. 1 must be OK.
- The battery voltage must be at least 11.5 V.
- Fuel pump relay must be OK

### Test sequence

- Connect fault reader V.A.G 1551 (V.A.G 1552). Start engine and select "Address word" 01 of engine control unit. When doing this the engine must be running at idling speed.
  (Connecting fault reader and selecting engine control unit => Page 4 .)

-> Indicated on display:

```
Rapid data transfer      HELP
Select function XXX
```

- Press keys 0 and 8 for the function "Read measured value block" and confirm entry with Q key.

-> Indicated on display:

```
Read measured value block
Input display group number XXX
```

- Press keys 0, 4 and 1 for "Display group number 41" and confirm entry with Q key.

-> Indicated on display:
(1...4 = Display zones)

```
Read measured value block 41
     1     2     3     4
```

- Check status of Lambda probe heating after catalyst in display zone 4:
  Display: Htg.aC.ON

***Note:***

*The Lambda probe heating may be switched on or off depending on the operating mode of the engine, therefore the display in display zone 4 may show "Htg.aC.ON or alternating from Htg.aC.ON to Htg.aC.OFF.*

If the specification is obtained:

- Press ⇒key.
- Press keys 0 and 6 for the function "End output" and confirm entry with the Q key.
- Switch off ignition.

Protected by copyright. Copying for private or commercial purposes, in part or in whole, is not permitted unless authorised by Volkswagen AG. Volkswagen AG does not guarantee or accept any liability with respect to the correctness of information in this document. Copyright by Volkswagen AG.
satelettronica

If the specification is not obtained:

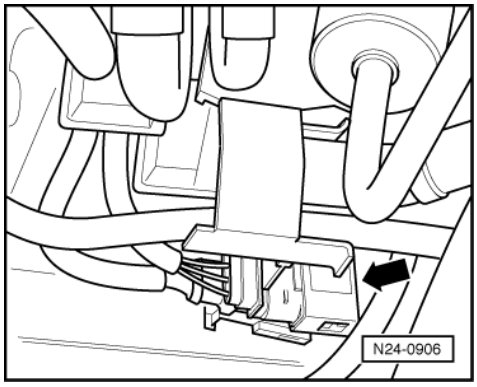


- -> Separate 4-pin connector (black) to Lambda probe after catalyst (G130) -arrow-.

Checking voltage supply

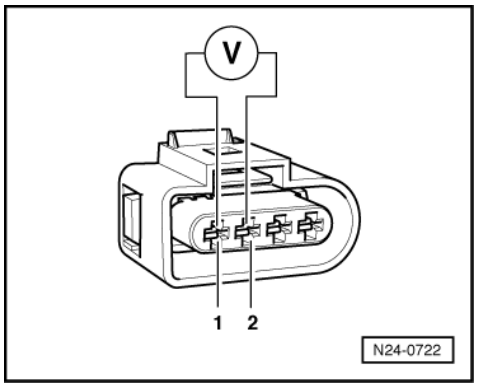


- -> Connect multimeter using aux. cables from V.A.G 1594 to measure voltage at contacts 1+2 (connector to engine control unit).
- Start engine and run at idling speed.
- Measure the voltage supply:
  When display group 41, display zone 4 displays
  Display, Htg.aC.ON:
  Specification: 11.0...14.5 V
  Display, Htg. aC.ON/Htg.aC.OFF (alternating)
  Specification: Between 0.0...12.0 V fluctuating
- Press ⇒key.
- Press keys 0 and 6 for the function "End output" and confirm entry with the Q key.
- Switch off ignition.

If no voltage is present:

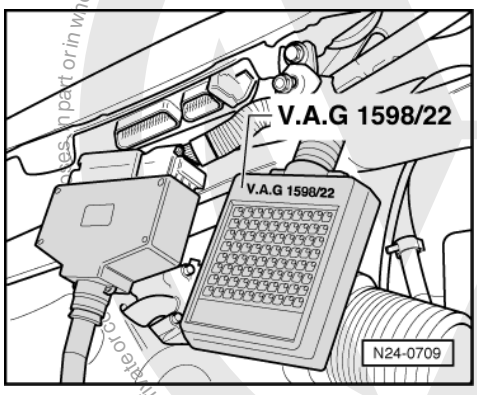


- Remove wiper arms and cowl panel:

satelettronica
Protected by copyright. Copyright by Volkswagen AG.
Copyright by Volkswagen AG. Volkswagen AG does not guarantee or accept any liability with respect to the correctness of information in this document.

=> Electrical system; Repair group 92; windscreen wiper system; removing and installing windscreen wiper system windscreen wiper system removing and installing windscreen wiper system

- -> Connect test box V.A.G 1598/22 to control unit wiring harness.

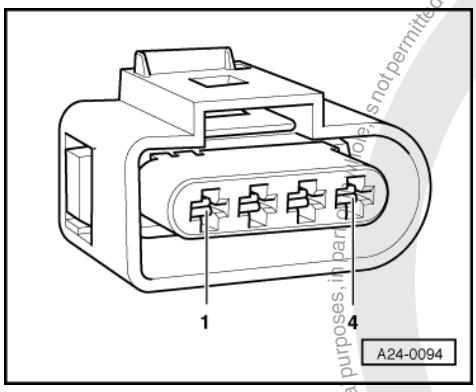


- -> Check wires between test box and 4-pin connector (connector to control unit) for open circuit using current flow diagram.
  Contact 2+socket 13
  Wire resistance: max. 1.5 ω

If the specification is obtained:

- Check wire between 4 pin connector contact 1 and fuel pump relay (J17) for open circuit using current flow diagram.
  Wire resistance: max. 1.5 ω

## 2.4 - Checking throttle valve control part

Components of throttle valve control part (J338):
Throttle valve drive (G186), angle sender 1 for throttle valve drive (G187) and angle sender 2 for throttle valve drive (G188).

*Note:*

*If the throttle valve control part is replaced, the new control part must without fail be adapted to the engine control unit => Page 135 .*

### Special tools, workshop equipment, testers, measuring instruments and auxiliary items required

- Fault reader V.A.G 1551 or vehicle system tester V.A.G 1552 with cable V.A.G 1551/3A
- Test box V.A.G 1598/22
- Hand multimeter V.A.G 1526 or multimeter V.A.G 1715
- Adapter set V.A.G 1594
- Current flow diagram

### Check conditions

- Coolant temperature must be at least 80 °C, =>display group 04, display zone 3.

### Test sequence

- Connect the fault reader V.A.G 1551 (V.A.G 1552). Then switch ignition on and select engine control unit with the "Address word" 01.
  (Connecting fault reader and selecting engine control unit => Page 4 .)

-> Indicated on display:

```
Rapid data transfer      HELP
Select function XXX
```

Volkswagen AG, Volkswagen AG does not guarantee or accept any liability with respect to the correctness of information in this document. Copyright by Volkswagen AG. Protected by copyright. Copying for private or commercial purposes, in part or in whole, is not permitted unless authorised by Volkswagen AG.
satelettronica

- Press keys 0 and 8 for the function "Read measured value block" and confirm entry with Q key.

-> Indicated on display:

```
Read measured value block
Input display group number XXX
```

- Press keys 0, 6 and 2 for the "Display group number 62" and confirm entry with Q key.

-> Indicated on display:
(1...4 = Display zones)

```
Read measured value block 62
     1     2     3     4
```

- Check throttle valve angle at idling stop from sender 1 (G187) in display zone 1
  Specification: 10...90 %
- Check throttle valve at idling stop from sender 2 (G188) in display zone 2.
  Specification: 90...10 %
- Depress accelerator slowly to full throttle position and observe angles displayed in display zones 1 and 2:

  The percentage figure in display zone 1 must increase evenly. Although the tolerance range 10...90 % will not be fully exploited.
  The percentage figure in display zone 2 must decrease evenly. Although the tolerance range 90...10 % will not be fully exploited.

***Notes:***

- The reason why the display in display zone 1 increases and the display in display zone 2 decreases is because the potentiometers (angle senders) in the throttle valve control part run in opposite directions.
- This means that the voltage of one angle sender moves towards 5 volts. (The more the throttle valve is opened the higher the voltage; percentage figure increases).

- Whilst the voltage of angle sender 2 decreases from 5 volts towards 0 volts. (The more the throttle valve is opened the lower the voltage; percentage figure decreases).

- Press ⇒key.
- Press keys 0 and 6 for the function "End output" and confirm entry with the Q key.
- Switch off ignition.

If the displays do not indicate as described:

- Remove air cleaner => Page 77 , Fig. 3 .

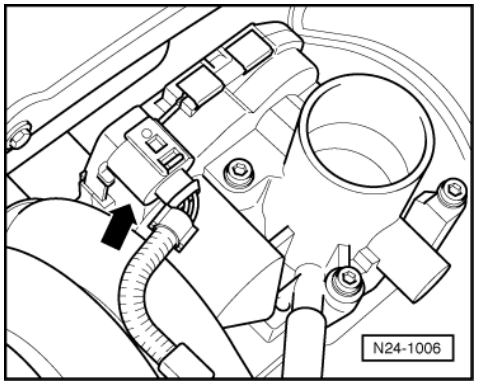


- -> Pull 6-pin connector off throttle valve control part -arrow-.



satelettronica

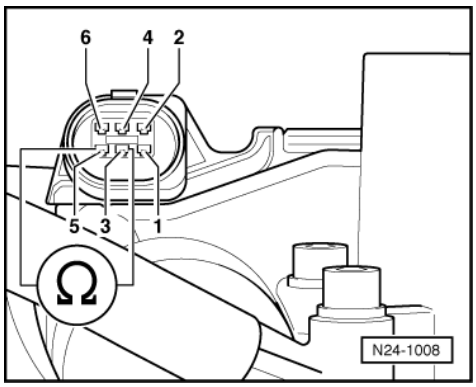


- -> Measure resistance at throttle valve drive between contacts 3 + 5
  Specification: 1.0...5.0 ω

If the specification is not obtained:

- Replace throttle valve control part
  => Page 68 , item 7 .
- Interrogate fault memory, if necessary, repair any faults and then erase fault memory => Page 9 , interrogating and erasing fault memory.
- Adapt engine control unit to throttle valve control part => Page 135 .

If the specification is obtained:

- Check voltage supply of throttle valve control part and wiring to control unit => Page 89 .
- Check the accelerator pedal position sender.

=> Repair group 20; Electronic engine output regulation (electronic accelerator (EPC)); Checking accelerator pedal position sender Electronic engine output regulation (electronic accelerator (EPC)) Checking accelerator pedal position sender

If the voltage supply and wiring is OK:

- Replace engine control unit
  => Page 133 .

### Checking voltage supply and wiring to control unit

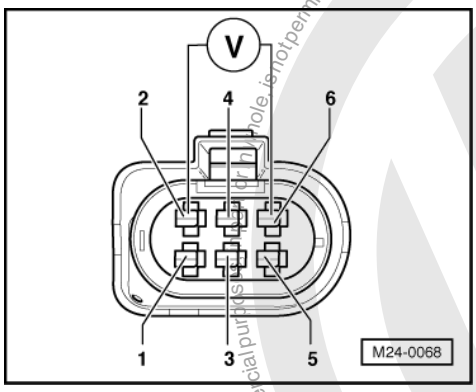


### Test conditions

- The battery voltage must be at least 11.5 V.

### Test sequence

- -> Connect Multimeter to measure voltage at connector contacts 2 + 6.
- Switch on ignition.
  Specification: min. 4.5 V

Protected by copyright. Copying for private or commercial purposes, in part or in whole, is not permitted unless authorised by Volkswagen AG. Volkswagen AG does not guarantee or accept any liability with respect to the correctness of information in this document. Copyright by Volkswagen AG.
satelettronica

- Switch off ignition.

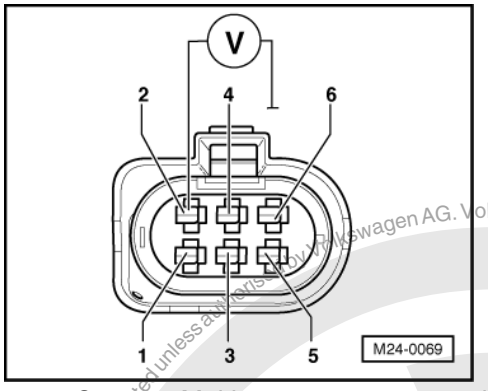


- -> Connect Multimeter to measure voltage at connector contact 2 and earth.
- Switch on ignition.
  Specification: min. 4.5 V
- Switch off ignition.

If the specifications are not attained:

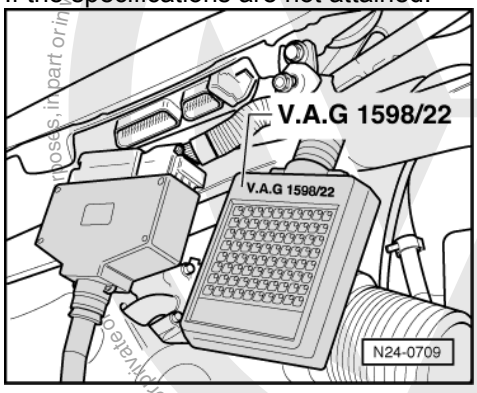


- Remove wiper arms and cowl panel:

=> Electrical system; Repair group 92; windscreen wiper system; removing and installing windscreen wiper system windscreen wiper system removing and installing windscreen wiper system
- -> Connect test box V.A.G 1598/22 to control unit wiring harness.

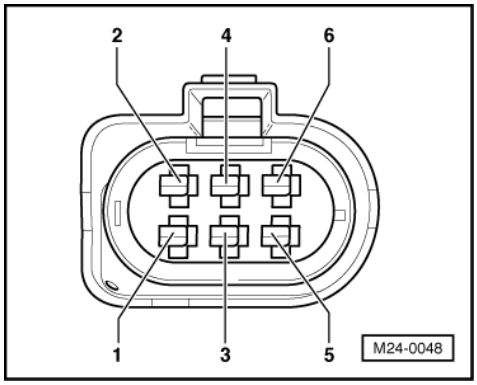


- -> Check wires between test box and 6-pin connector (connector to control unit) for open circuit using current flow diagram.
  Contact 1+socket 68
  Contact 2+socket 55
  Contact 3+socket 80
  Contact 4+socket 75
  Contact 5+socket 66
  Contact 6+socket 61
  Wire resistance: max. 1.5 ω

Protected by copyright. Copyright by Volkswagen AG. Volkswagen AG does not guarantee or accept any liability with respect to the correctness of information in this document. Copyright by Volkswagen AG.
satelettronica

- Additionally check wires for short to one another, to vehicle earth and to battery positive.
  Specification: ∞ω

If no fault is detected in the wiring:

- Check engine control unit voltage supply => Page 130 .

## 2.5 - Checking intake manifold pressure sender

*Note:*

*Only gold-plated contacts may be used when servicing the sender connector contacts*

**Special tools, workshop equipment, testers, measuring instruments and auxiliary items required**

- Test box V.A.G 1598/22
- Hand multimeter V.A.G 1526 or multimeter V.A.G 1715

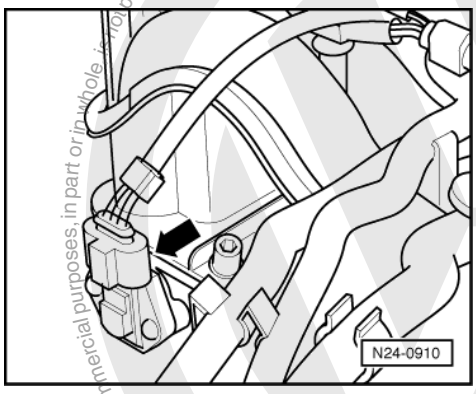


- Adapter set V.A.G 1594
- Current flow diagram

**Test sequence**

- -> Pull 4-pin connector off intake manifold pressure sender (G71) and intake air temperature sender (G42) -arrow-.

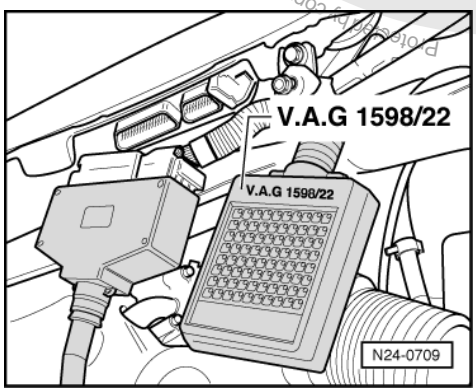


- Remove wiper arms and cowl panel:

=> Electrical system; Repair group 92; windscreen wiper system; removing and installing windscreen wiper system windscreen wiper system removing and installing windscreen wiper system

- -> Connect test box V.A.G 1598/22 to control unit wiring harness.

Volkswagen AG. Volkswagen AG does not guarantee or accept any liability with respect to the correctness of information in this document. Copyright by Volkswagen AG.
Please respect copyright. Copying for private or commercial purposes, in part or in whole, is not permitted unless authorised by Volkswagen AG.
satelettronica

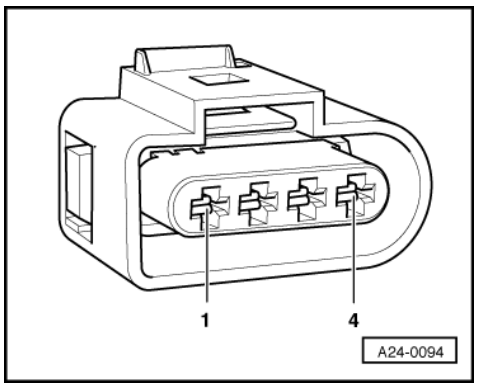


- -> Check wires between test box and 4-pin connector (connector to control unit) for open circuit using current flow diagram.
  Contact 3+socket 62
  Contact 4+socket 70
  Wire resistance: max. 1.5 ω
- Additionally check wires for short to one another, to vehicle earth and to battery positive.
  Specification: ∞ω

If no fault is detected in the wiring:

- Renew the intake manifold pressure sender (G71) with intake air temperature sender (G42) => Page 70 , item 15 .

## 2.6 - Checking intake air temperature sender

*Note:*

*Only gold-plated contacts may be used when servicing the sender connector contacts*

**Special tools, workshop equipment, testers, measuring instruments and auxiliary items required**

- Fault reader V.A.G 1551 or vehicle system tester V.A.G 1552 with cable V.A.G 1551/3A
- Test box V.A.G 1598/22
- Hand multimeter V.A.G 1526 or multimeter V.A.G 1715
- Adapter set V.A.G 1594
- Current flow diagram
- Chilling spray (commercially available)

**Test sequence**

- Connect the fault reader V.A.G 1551 (V.A.G 1552). Then switch ignition on and select engine control unit with the "Address word" 01.
  (Connecting fault reader and selecting engine control unit => Page 4 .)

-> Indicated on display:

```
Rapid data transfer      HELP
Select function XXX
```

- Press keys 0 and 8 for the function "Read measured value block" and confirm entry with Q key.

-> Indicated on display:

```
Read measured value block
Input display group number XXX
```

- Press keys 0, 0 and 4 for "Display group number 4" and confirm entry with Q key.

-> Indicated on display:

Protected by copyright. Copying for private or commercial purposes, in part or in whole, is not permitted unless authorised by Volkswagen AG. Volkswagen AG does not guarantee or accept any liability with respect to the correctness of information in this document. Copyright by Volkswagen AG.
satelettronica

(1...4 = Display zones)

```
Read measured value block 4
     1     2     3     4
```

- Read off intake air temperature value in display zone 4.
- Perform check according to following table:

| Display | Cause | Continuation of check |
|---|---|---|
| Approx. ambient temperature1) | --- | => Page 93 |
| -40 °C | Open circuit or short to positive | => Page 94 |
| 129 °C | Short to earth | => Page 95 |

1) If a temperature is displayed which is below the ambient air temperature of the sender, check sender wiring for transfer resistances. Note when doing this that sender is heated from external sources, e.g. radiated heat when engine is not running.

**Continuation of check when display = ambient temperature:**

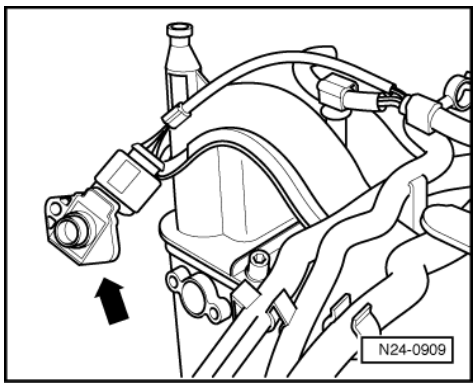


Functional check of sender

- -> Remove intake air temperature sender together with intake manifold pressure sender (connector remains connected).
- Note intake air temperature value in display zone 4.
- Spray sender with commercial chilling agent whilst observing the temperature value. The temperature value must
  decrease.
- Press ⇒key.
- Press keys 0 and 6 for the function "End output" and confirm entry with the Q key.
- Switch off ignition.

If the specification is not obtained:

- Renew the intake manifold pressure sender (G71) with intake air temperature sender (G42) => Page 70 , item 15 .

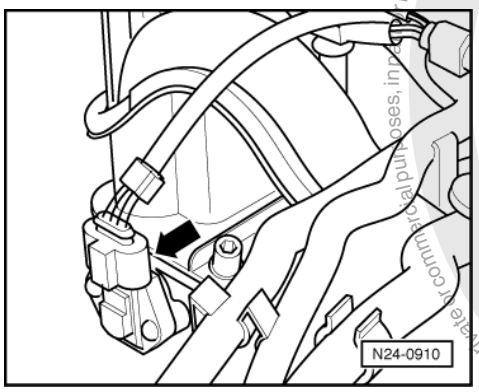


satelettronica
Protected by copyright. Copying for private or commercial purposes, in part or in whole, is not permitted unless authorised by Volkswagen AG. Volkswagen AG does not guarantee or accept any liability with respect to the correctness of information in this document. Copyright by Volkswagen AG.

Continuation of check when display -40 °C:

- -> Pull 4 pin connector off intake air temperature sender (G42) with intake manifold pressure sender (G71) -arrow-.

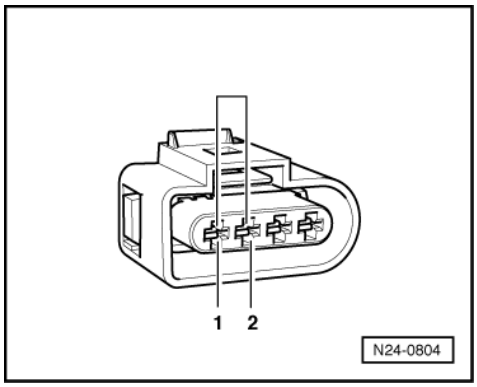


- -> Bridge connector contacts 1+2 using aux. cables from V.A.G 1594 and observe display.

Display jumps to 129 °C:

- Press ⇒key.
- Press keys 0 and 6 for the function "End output" and confirm entry with the Q key.
- Switch off ignition.
- Renew the intake manifold pressure sender (G71) with intake air temperature sender (G42) => Page 70 , item 15 .

If the display remains at -40 °C:

- Press ⇒key.

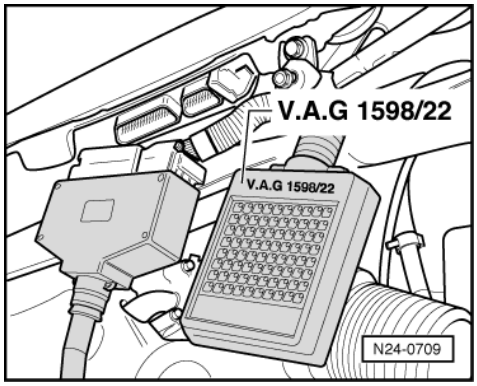


- Press keys 0 and 6 for the function "End output" and confirm entry with the Q key.
- Switch off ignition.
- Remove wiper arms and cowl panel:

=> Electrical system; Repair group 92; windscreen wiper system; removing and installing windscreen wiper system windscreen wiper system removing and installing windscreen wiper system

- -> Connect test box V.A.G 1598/22 to control unit wiring harness.

satelettronica
Protected by copyright. Copying for private or commercial purposes, in part or in whole, is not permitted unless authorised by Volkswagen AG. Volkswagen AG does not guarantee or accept any liability with respect to the correctness of information in this document. Copyright by Volkswagen AG.

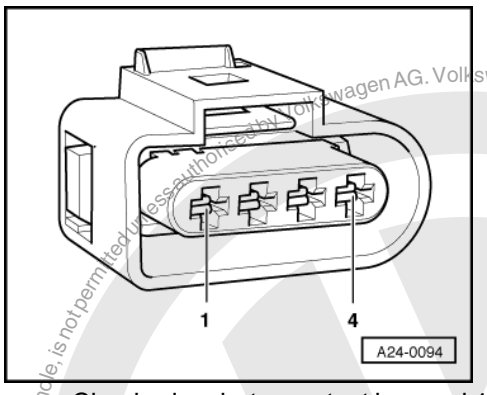


- -> Check wires between test box and 4-pin connector (connector to control unit) for open circuit using current flow diagram.
  Contact 1+socket 54
  Contact 2+socket 56
  Wire resistance: max. 1.5 ω
- Check wiring additionally for short circuit to battery positive.
  Specification: ∞ω

If no fault is detected in the wiring:

- Renew the intake manifold pressure sender (G71) with intake air temperature sender (G42) => Page 70 , item 15 .

**Continuation of check when display shows 129 °C:**

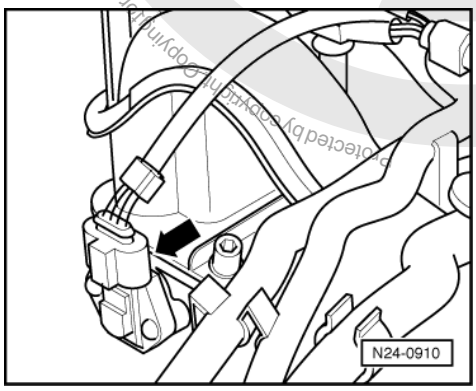


- -> Pull 4 pin connector off intake air temperature sender (G42) with intake manifold pressure sender (G71) -arrow-.

If the display jumps to -40 °C:

- Press ⇒key.
- Press keys 0 and 6 for the function "End output" and confirm entry with the Q key.
- Switch off ignition.
- Renew the intake manifold pressure sender (G71) with intake air temperature sender (G42) => Page 70 , item 15 .

If display remains at 129 °C:

- Press ⇒key.

- Press keys 0 and 6 for the function "End output" and confirm entry with the Q key.

Copyright by Volkswagen AG. Volkswagen AG does not guarantee or accept any liability with respect to the correctness of information in this document. Copyright by Volkswagen AG. All rights reserved. Protected by copyright. Copying for private or commercial purposes, in part or in whole, is not permitted unless authorised by Volkswagen AG.
satelettronica

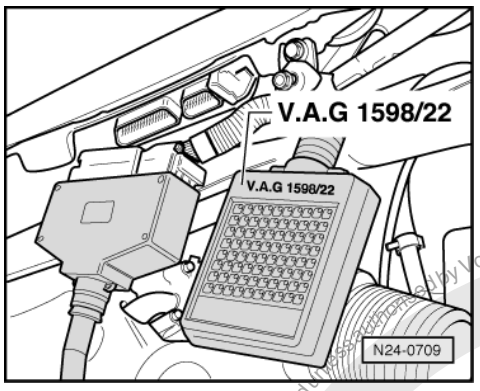


- Switch off ignition.
- Remove wiper arms and cowl panel:

=> Electrical system; Repair group 92; windscreen wiper system; removing and installing windscreen wiper system windscreen wiper system removing and installing windscreen wiper system

- -> Connect test box V.A.G 1598/22 to control unit wiring harness.

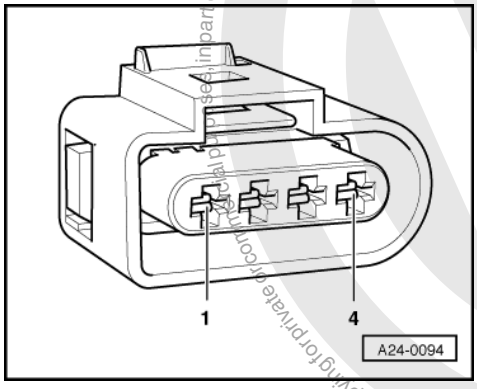


- -> Check wires between test box and 4-pin connector (connector to control unit) for open circuit using current flow diagram.
  Contact 1+socket 54
  Contact 2+socket 56
  Wire resistance: max. 1.5 ω
- Check wiring additionally for short circuit to battery positive.
  Specification: ∞ω

If no fault is detected in the wiring:

- Renew the intake manifold pressure sender (G71) with intake air temperature sender (G42)
  => Page 70 , item 15 .

## 2.7 - Checking coolant temperature sender

### Special tools, workshop equipment, testers, measuring instruments and auxiliary items required

- Fault reader V.A.G 1551 or vehicle system tester V.A.G 1552 with cable V.A.G 1551/3A
- Test box V.A.G 1598/22
- Hand multimeter V.A.G 1526 or multimeter V.A.G 1715
- Adapter set V.A.G 1594
- Current flow diagram

### Test conditions

- Engine must be cold.

Protected by copyright. Copying for private and commercial purposes, in part or in whole, is not permitted unless authorised by Volkswagen AG. Volkswagen AG does not guarantee or accept any liability with respect to the correctness of information in this document. Copyright by Volkswagen AG.
satelettronica

**Test sequence**

- Connect the fault reader V.A.G 1551 (V.A.G 1552). Then switch ignition on and select engine control unit with the "Address word" 01.
  (Connecting fault reader and selecting engine control unit => Page 4 .)

-> Indicated on display:

```
Rapid data transfer      HELP
Select function XXX
```

- Press keys 0 and 8 for the function "Read measured value block" and confirm entry with Q key.

-> Indicated on display:

```
Read measured value block
Input display group number XXX
```

- Press keys 0, 0 and 4 for "Display group number 4" and confirm entry with Q key.

-> Indicated on display:
(1...4 = Display zones)

```
Read measured value block 4
     1     2     3     4
```

- Read off coolant temperature value in display zone 3.

- Perform check according to following table:

| Display | Cause | Continuation of check |
|---|---|---|
| Approx. coolant temperature1) | --- | Only if sporadic faults have been detected:2) => Page 97 |
| -40 °C | Open circuit or short to positive | => Page 98 |
| 129 °C | Short to earth | => Page 99 |

1) If a temperature is displayed which deviates greatly from the ambient temperature of the sender, check sender wiring for transfer resistances.

2) Check is only possible when the engine is cold.

**Continuation of check when display = coolant temperature:**

Functional check of sender

- Connect fault reader V.A.G 1551 (V.A.G 1552). Start engine and select "Address word" 01 of engine control unit. When doing this the engine must be running at idling speed.
  (Connecting fault reader and selecting engine control unit => Page 4 .)

-> Indicated on display:

```
Rapid data transfer      HELP
Select function XXX
```

- Press keys 0 and 8 for the function "Read measured value block" and confirm entry with Q key.

-> Indicated on display:

```
Read measured value block
Input display group number XXX
```

Protected by copyright. Copyright by Volkswagen AG. Volkswagen AG does not guarantee or accept any liability with respect to the correctness of information in this document. Copyright by Volkswagen AG. Copying for private or commercial purposes, in part or in whole, is not permitted unless authorised by Volkswagen AG.
satelettronica

- Press keys 0, 0 and 4 for "Display group number 4" and confirm entry with Q key.

-> Indicated on display:
(1...4 = Display zones)

```
Read measured value block 4
     1     2     3     4
```

- Observe coolant temperature value in display zone 3 with engine running. The temperature value must increase evenly without interruption.

***Notes:***

- Temperature increases in steps of 1.0 °C.
- If irregular engine running occurs in certain temperature ranges and the temperature figure does not increase without interruption, the temperature signal is temporarily interrupted and the sender must be renewed.

- Press ⇒key.
- Press keys 0 and 6 for the function "End output" and confirm entry with the Q key.
- Switch off ignition.

If the specification is not obtained:

- Remove air cleaner => Page 77 , Fig. 3 .
- Replace coolant temperature sender (G62) with coolant temperature gauge sender (G2) =>Page 66 , item 27 .

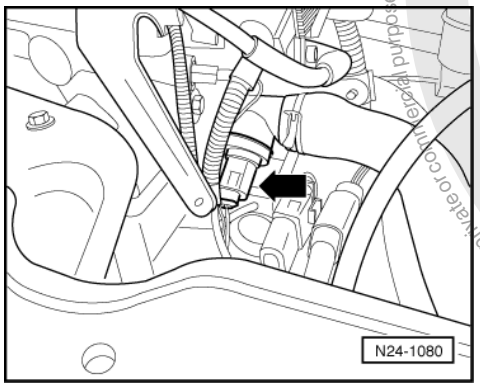


**Continuation of check when display shows -40 °C:**

- Remove air cleaner => Page 77 , Fig. 3 .
- -> Pull the 4 pin connector off coolant temperature sender (G62) with coolant temperature gauge sender (G2) -arrow-.

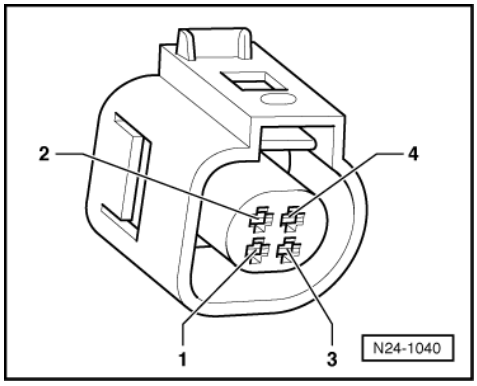


- -> Bridge connector contacts 1+3 using aux. cables from V.A.G 1594 and observe display.

Protected by copyright. Copying for private or commercial purposes, in part or in whole, is not permitted unless authorised by Volkswagen AG. Volkswagen AG does not guarantee or assume any liability with respect to the correctness of information in this document. Copyright by Volkswagen AG.
satelettronica

Display jumps to 129 °C:

- Press ⇒key.
- Press keys 0 and 6 for the function "End output" and confirm entry with the Q key.
- Switch off ignition.
- Replace coolant temperature sender (G62) with coolant temperature gauge sender (G2) =>Page 66 , item 27 .

If the display remains at -40 °C:

- Press ⇒key.

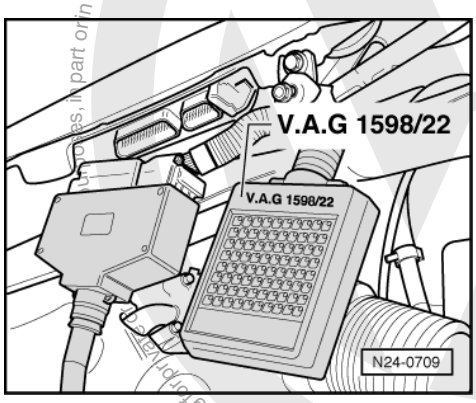


- Press keys 0 and 6 for the function "End output" and confirm entry with the Q key.
- Switch off ignition.
- Remove wiper arms and cowl panel:

=> Electrical system; Repair group 92; windscreen wiper system; removing and installing windscreen wiper system windscreen wiper system removing and installing windscreen wiper system

- -> Connect test box V.A.G 1598/22 to control unit wiring harness.

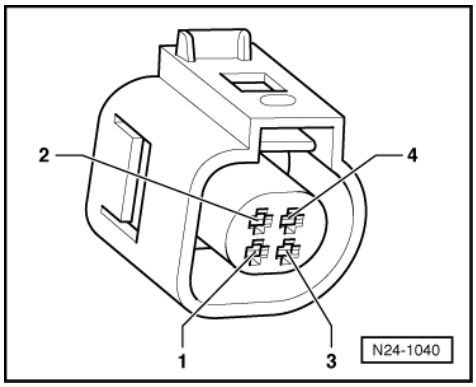


- -> Check wires for open circuit between test box and 4-pin connector (connector to control unit) using current flow diagram.
  Contact 3+socket 74
  Contact 4+socket 54
  Wire resistance: max. 1.5 ω
- Check wiring additionally for short circuit to battery positive.
  Specification: ∞ω

If no fault is detected in the wiring:

- Replace coolant temperature sender (G62) with coolant temperature gauge sender (G2) =>Page 66 , item 27 .

**Continuation of check when display shows 129 °C:**

- Remove air cleaner => Page 77 , Fig. 3 .

satelettronica

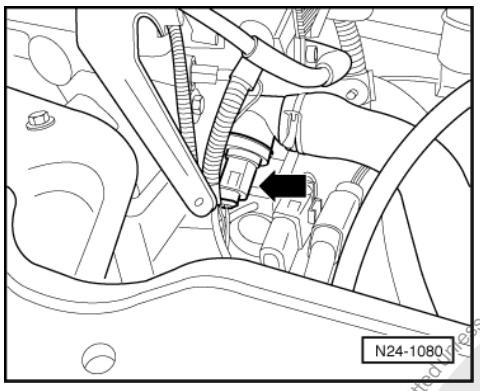


- -> Pull the 4 pin connector off coolant temperature sender (G62) with coolant temperature gauge sender (G2) -arrow-.

If the display jumps to -40 °C:
- Press ⇒key.
- Press keys 0 and 6 for the function "End output" and confirm entry with the Q key.
- Switch off ignition.
- Replace coolant temperature sender (G62) with coolant temperature gauge sender (G2) =>Page 66, item 27 .

If display remains at 129 °C:
- Press ⇒key.

- Press keys 0 and 6 for the function "End output" and confirm entry with the Q key.
- Switch off ignition.

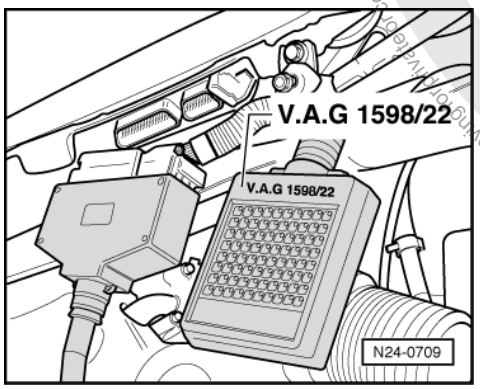


- Remove wiper arms and cowl panel:

=> Electrical system; Repair group 92; windscreen wiper system; removing and installing windscreen wiper system windscreen wiper system removing and installing windscreen wiper system
- -> Connect test box V.A.G 1598/22 to control unit wiring harness.

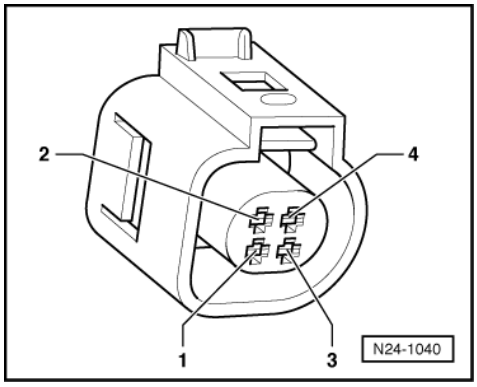


Protected by copyright. Copying for private or commercial purposes, in part or in whole, is not permitted unless authorised by Volkswagen AG. Volkswagen AG does not guarantee or accept any liability with respect to the correctness of information in this document. Copyright by Volkswagen AG.
satelettronica

- -> Check wires for open circuit between test box and 4-pin connector (connector to control unit) using current flow diagram.
  Contact 3+socket 74
  Contact 4+socket 54
  Wire resistance: max. 1.5 ω
- Check wiring additionally for short circuit to battery positive.
  Specification: ∞ω

If no fault is detected in the wiring:

- Replace coolant temperature sender (G62) with coolant temperature gauge sender (G2) =>Page 66 , item 27 .

## 2.8 - Checking engine speed sender

The engine speed sender (G28) is a speed and reference mark sender. The engine will not start if there is no speed signal. If the speed signal fails when the engine is running, it will cause the engine to stall immediately.

### Special tools, workshop equipment, testers, measuring instruments and auxiliary items required

- Test box V.A.G 1598/22
- Hand multimeter V.A.G 1526 or multimeter V.A.G 1715
- Adapter set V.A.G 1594
- Current flow diagram

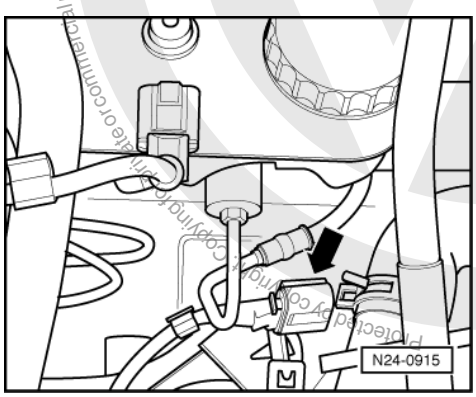


### Test conditions

- The battery voltage must be at least 11.5 V.

### Test sequence

- Remove air cleaner => Page 77 , Fig. 3 .
- -> Detach black 3-pin connector to engine speed sender -arrow- (on thermostat housing).

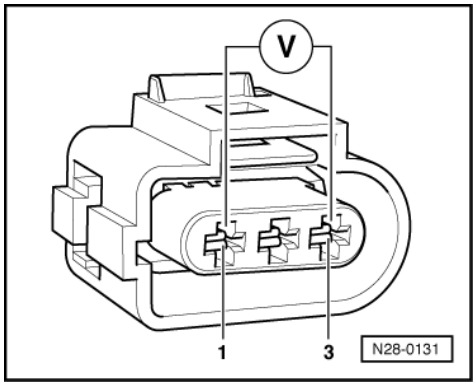


Volkswagen AG. Volkswagen AG does not guarantee or accept any liability with respect to the correctness of information in this document. Copyright by Volkswagen AG.
satelettronica

- -> Connect multimeter to measure voltage using aux. cables from V.A.G 1594 to contacts 1 (positive) and 3 (earth) on engine speed sender connector.
- Switch on ignition.
  Specification: min. 4.5 V
- Switch off ignition.

If no voltage is present:

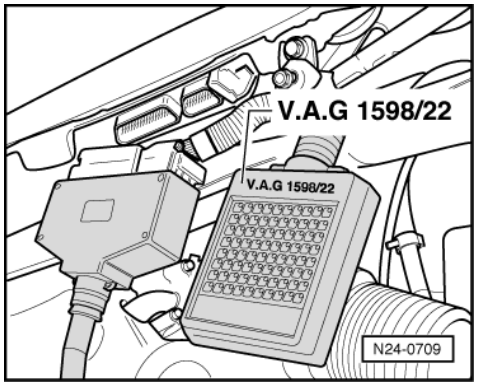


- Remove wiper arms and cowl panel:

=> Electrical system; Repair group 92; windscreen wiper system; removing and installing windscreen wiper system windscreen wiper system removing and installing windscreen wiper system

- -> Connect test box V.A.G 1598/22 to control unit wiring harness.

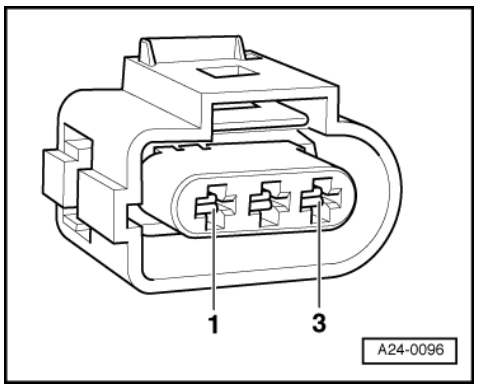


- -> Check wires between test box and 3-pin connector (connector to control unit) for open circuit using current flow diagram.
  Contact 1+socket 62
  Contact 2+socket 53
  Contact 3+socket 67
  Wire resistance: max. 1.5 ω

- Additionally check wires for short to one another.
  Specification: ∞ω

If no wiring fault is detected and voltage was present between contacts 1+3:

- Replace engine speed sender (G28)
  =>Page 62 , item 18 .

If no wiring fault is detected and no voltage was present between contacts 1+3:

- Replace engine control unit
  => Page 133 .

Protected by copyright. Copying for private or commercial purposes, in part or in whole, is not permitted unless authorised by Volkswagen AG. Volkswagen AG does not guarantee or accept any liability with respect to the correctness of information in this document. Copyright by Volkswagen AG.
satelettronica

## 2.9 - Checking injectors

### Checking activation

**Special tools, workshop equipment, testers, measuring instruments and auxiliary items required**

- Test box V.A.G 1598/22
- Hand multimeter V.A.G 1526 or multimeter V.A.G 1715
- Diode test lamp V.A.G 1527
- Adapter set V.A.G 1594
- Current flow diagram

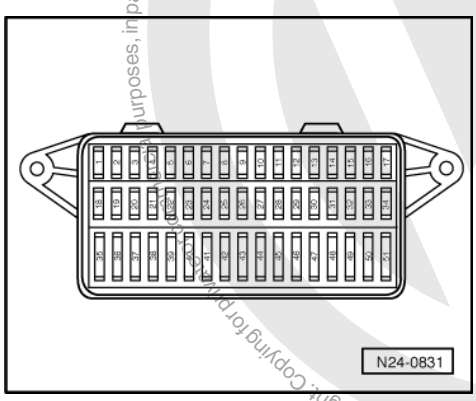


### Check conditions

- -> Fuse No. 3 must be OK.
- Earth connection between engine (on gearbox bell housing) and body (below battery) OK.
- Earth connection in plenum chamber OK.
- The battery voltage must be at least 11.5 V.
- Engine speed sender must be OK, checking Page 101 .

- Hall sender must be OK, checking =>Page 152 .
- Fuel pump relay must be OK

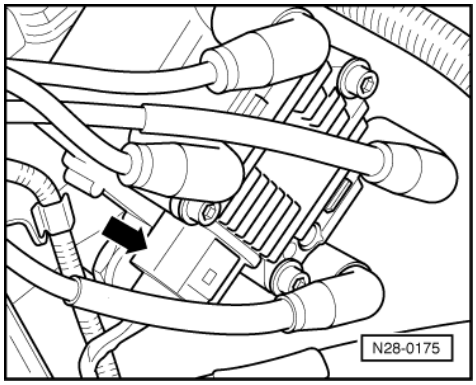


### Test sequence

- Remove air cleaner => Page 77 , Fig. 3 .
- -> Pull 4 pin connector off ignition transformer -arrow-.

Protected by copyright. Copying for private or commercial purposes, in part or in whole, is not permitted unless authorised by Volkswagen AG. Volkswagen AG does not guarantee or accept any liability with respect to the correctness of information in this document. Copyright by Volkswagen AG.
satelettronica

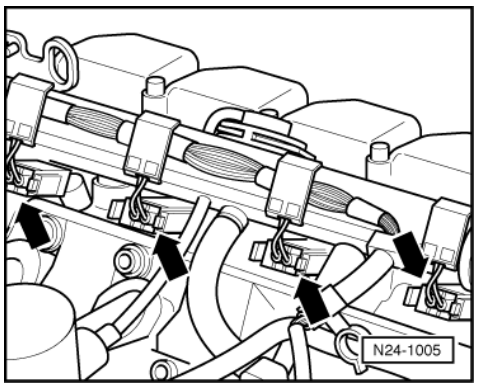


- -> Pull plug -arrows- off all injectors.

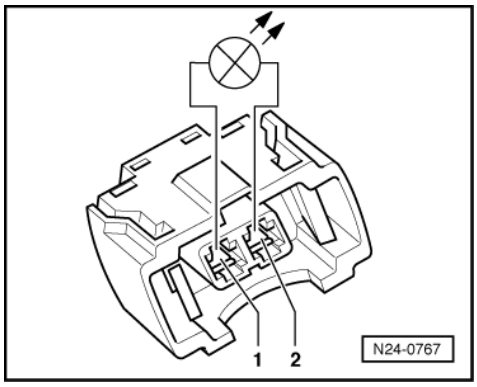


- -> Connect diode test lamp V.A.G 1527 using aux. cables from V.A.G 1594 to connector contacts of Cyl. 1.
- Operate the starter and check the voltage supply for No. 1 cylinder injector.
  The LED must light up
- Repeat check at the injector connectors for Cyls. 2...4.
- Switch off ignition.

If the LED does not light up on any cylinder:

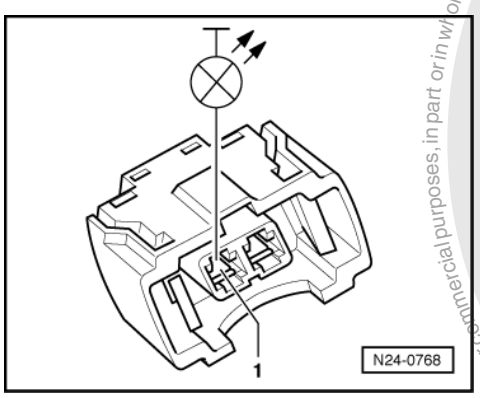


- -> Connect diode test lamp to Cyl. 1 connector, contact 1 and earth.
  The LED must light up
- Repeat check at the injector connectors for Cyls. 2...4.

If the LED does not light up:

- Switch off ignition.
- Check wire between 2 pin connector contact 1 and fuel pump relay (J17) for open circuit according to current flow diagram.
  Wire resistance: max. 1.5 ω

If the LED does not light up on one or several cylinders:

Protected by copyright. Copying for private or commercial purposes, in part or in whole, is not permitted unless authorised by Volkswagen AG. Volkswagen AG does not guarantee or accept any liability with respect to the correctness of information in this document. Copyright by Volkswagen AG.
satelettronica

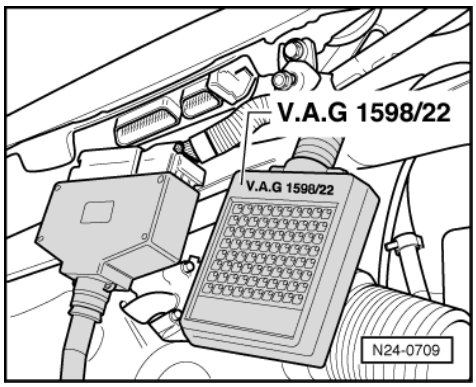


- Remove wiper arms and cowl panel:

=> Electrical system; Repair group 92; windscreen wiper system; removing and installing windscreen wiper system windscreen wiper system removing and installing windscreen wiper system

- -> Connect test box V.A.G 1598/22 to control unit wiring harness.

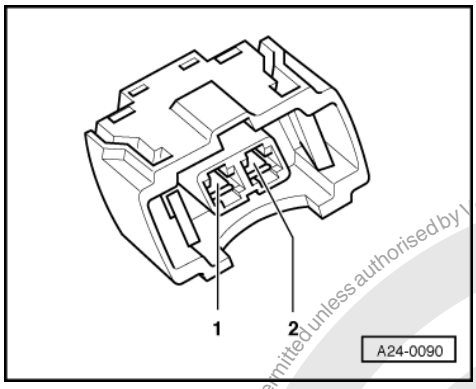


- -> Check wires between test box and 2-pin connectors for injectors (connector to control unit) for open circuit using current flow diagram.
  Injector 1: contact 2+socket 79
  Injector 2: contact 2+socket 59
  Injector 3: contact 2+socket 73
  Injector 4: contact 2+socket 65
  Injector: max. 1.5 ω
- Additionally check wires for short to one another.
  Specification: ∞ω
- Check wiring between connector contacts 1 of injectors for open circuit to one another.
  Wire resistance: Max. 1.5 ω

**Checking resistance of injectors**

**Test sequence**

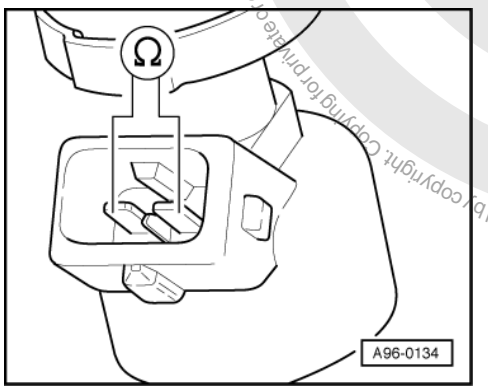


Protected by copyright. Copying for private or commercial purposes, in part or in whole, is not permitted unless authorised by Volkswagen AG. Volkswagen AG does not guarantee or accept any liability with respect to the correctness of information in this document. Copyright by Volkswagen AG.
satelettronica

- -> Check resistance of injectors between contacts.
  Specification: 12...17 ω

***Note:***

*The resistance figures are valid for approx. 20 °C. At higher temperatures the resistance figures will increase.*

If the specification is not attained:

- Renew defective injector
  Page 72 , item 9 .

Perform installation of injectors in reverse order. When doing this note the following:

- Renew O-rings on all injectors and lightly moisten with clean engine oil.
- Insert injectors vertically and in the correct position into the fuel rail and secure with retaining clips.
- With injectors secured to fuel rail, fit fuel rail on cylinder head and press in evenly.

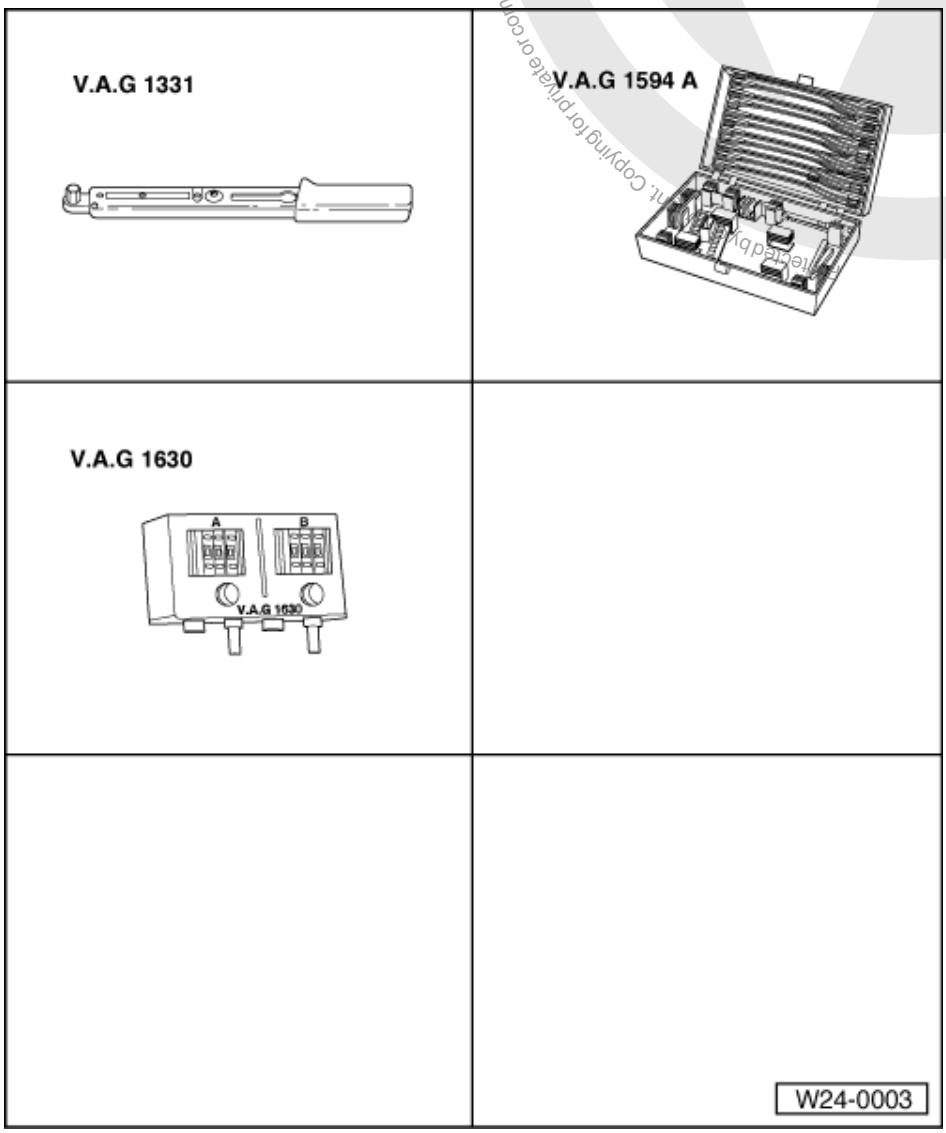


Checking spray pattern and for leaks

Special tools, workshop equipment, test and measuring appliances and auxiliary items required

Reproduced by Volkswagen AG. Volkswagen AG does not guarantee or accept any liability with respect to the correctness of information in this document. Copyright by Volkswagen AG. Not permitted unless authorised, in part or in whole, is not permitted unless authorised. Copying for private or commercial purposes, in part or in whole, is not permitted unless authorised by Volkswagen AG.
satelettronica

- V.A.G 1331 Torque wrench (5...50 Nm)
- V.A.G 1594 A Adapter set
- V.A.G 1630 Digital potentiometer
- Measuring container

### Test conditions

- The fuel pressure must be in order, checking
  => Page 109 , checking fuel pressure regulator and holding pressure.

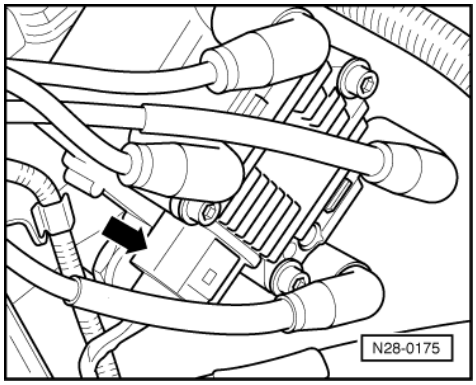


### Test sequence

- Remove air cleaner => Page 77 , Fig. 3 .
- -> Pull 4 pin connector off ignition transformer -arrow-.

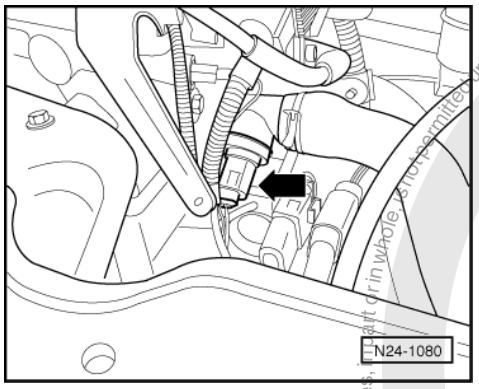


- -> Pull the 4 pin connector off coolant temperature sender (G62) with coolant temperature gauge sender (G2) -arrow-.

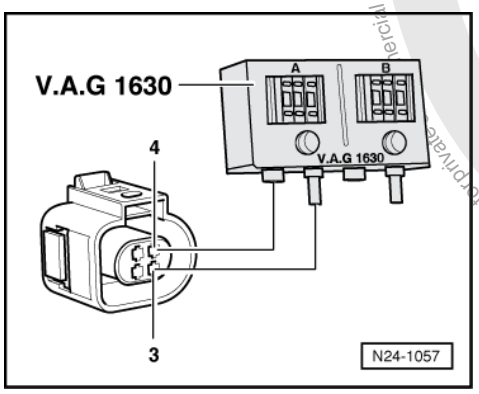


- -> Connect digital potentiometer V.A.G 1630 using adapter cables from V.A.G 1594 to contacts 3+4 of connector and set connected side to 15 kω.

Protected by copyright. Copying for private or commercial purposes, in part or in whole, is not permitted unless authorised by Volkswagen AG. Volkswagen AG does not guarantee or accept any liability with respect to the correctness of information in this document. Copyright by Volkswagen AG.
satelettronica

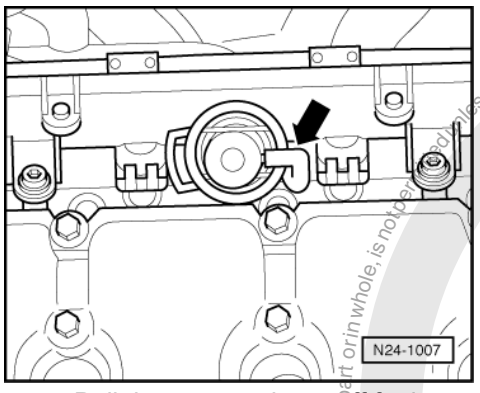


- -> Pull the vacuum hose off fuel pressure regulator -arrow-.
- Unclip injector wiring harness on fuel rail.
- Remove fuel rail complete with injectors from cylinder head (fuel hoses remain connected)
  => Page 62 , item 11 .

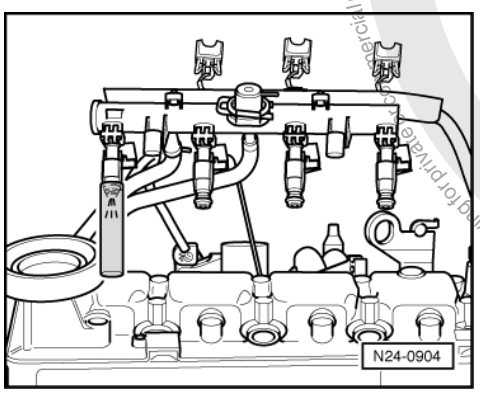


- -> Hold a small container under the injector to be checked and pull connectors off all other injectors.
- Have 2nd person operate starter. Injector must spray in pulses.
- Repeat check with other injectors ensuring that injector to be checked is only connected.
- Switch off ignition and afterwards check injectors for leaks. No more than
  2 drops/min
  may leak from each injector.

If the fuel loss is greater:

- Switch off ignition.
- Renew defective injector
  Page 72 , item 9 .

Perform installation of injectors in reverse order. When doing this note the following:

- Renew O-rings on all injectors and lightly moisten with clean engine oil.
- Insert injectors vertically and in the correct position into the fuel rail and secure with retaining clips.
- With injectors secured to fuel rail, fit fuel rail on cylinder head and press in evenly.

Protected by copyright. Copying for private or commercial purpose, in part or in whole, is not permitted unless authorised by Volkswagen AG. Volkswagen AG does not guarantee or accept any liability with respect to the correctness of information in this document. Copyright by Volkswagen AG.
satelettronica

## 2.10 - Checking fuel pressure regulator and holding pressure

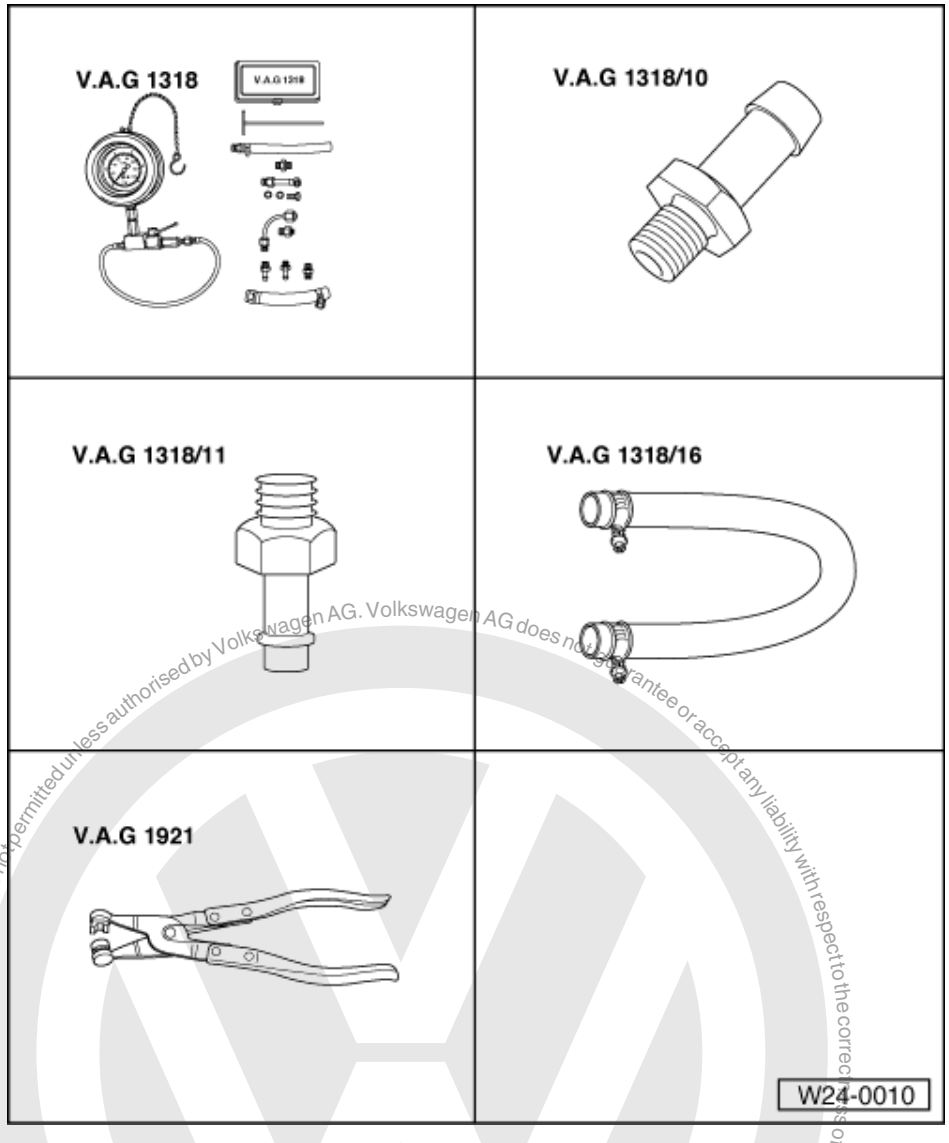


The fuel pressure regulator regulates the fuel pressure depending on intake manifold pressure.

The specification for the check is dependent upon the working pressure of the fuel pump. This is approx. 3.0 bar

**Special tools, workshop equipment, test and measuring appliances and auxiliary items required**

- V.A.G 1318 Pressure gauge
- V.A.G 1318/10 Adapter
- V.A.G 1318/11 Adapter
- V.A.G 1318/16 Hose adapter
- V.A.G 1921 Spring-type clip pliers

Copyright by Volkswagen AG. Volkswagen AG does not guarantee or accept any liability with respect to the correctness of information in this document. Copyright by Volkswagen AG. Reproduction, in whole or in part, for private or commercial purposes, is not permitted unless authorised by Volkswagen AG.
satelettronica

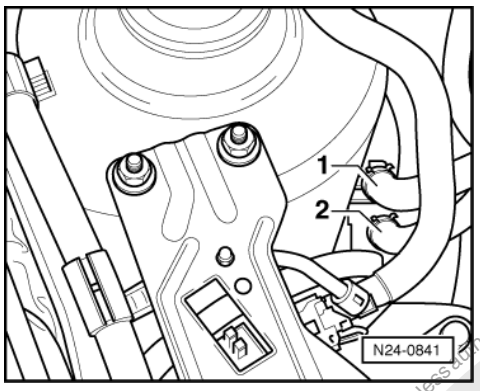


Test sequence

- Pull fuel pump fuse No. 40 out of fuse holder.
- Remove air cleaner => Page 77 , Fig. 3 .
- -> Pull off supply pipe/hose -1- (with white marking) and collect fuel that leaks out with a cloth.

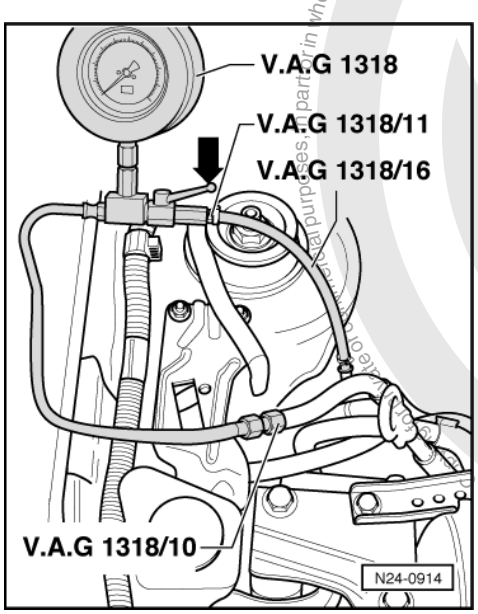


Warning!
Fuel supply lines are under pressure! Before removing from hose connection wrap a cloth around the connection. Then release pressure by carefully pulling hose off connection.

- -> Connect pressure gauge V.A.G 1318 with adapter V.A.G 1318/10 to supply hose -1- and with adapter V.A.G 1318/11 and hose adapter V.A.G 1318/16 to supply pipe.
- Open shut-off tap on pressure gauge. The handle points in direction of flow.

- Insert fuel pump fuse No. 40 into fuse holder.
- Start the engine and run at idling speed.
- Measure fuel pressure.
  Specification: Approx. 2.5 bar

Protected by copyright. Copyright by Volkswagen AG. Volkswagen AG does not guarantee or accept any liability with respect to the correctness of information in this document. Copyright by Volkswagen AG. Reproduction or transmission to third parties, in whole or in part, for commercial purposes, is not permitted unless authorised by Volkswagen AG.
satelettronica

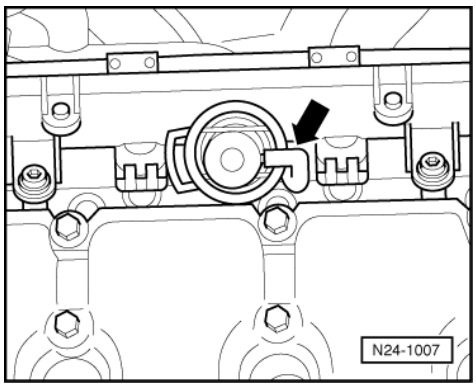


- -> Pull vacuum hose off fuel pressure regulator -arrow-. The fuel pressure must increase to approx. 3.0 bar.
- Switch off ignition.

If the specification is not obtained:

- Check quantity supplied by fuel pump.

=> Rep. Gr. 20; Removing and installing parts of fuel system; checking fuel pump

If the specification is obtained:

- Check for leaks and holding pressure by observing pressure drop on gauge. After 10 minutes there must be a residual pressure of at least 2.0 bar.

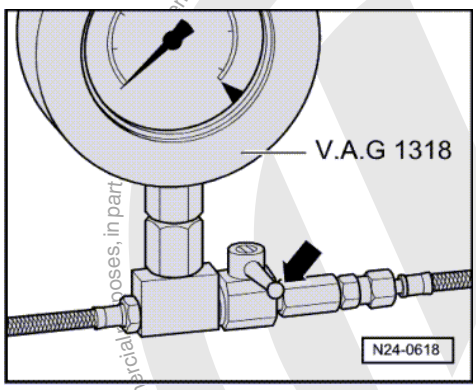


If the holding pressure drops below 2 bar:

- Start the engine and run at idling speed.
- -> Switch ignition off after the pressure has built-up. At the same time close pressure measured device cut-off tap (handle cross through-flow direction -arrow-).
- Observe pressure drop on gauge.

If the pressure does not drop:

Protected by copyright. Copyright by Volkswagen AG.
Copyright by Volkswagen AG. Volkswagen AG does not guarantee or accept any liability with respect to the correctness of information in this document.
Reproduction permitted only for private or commercial purposes, in part or in whole, unless authorised by Volkswagen AG.
satelettronica

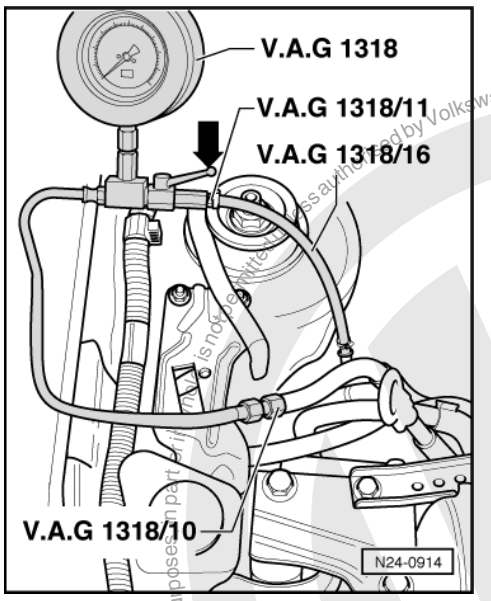


- Check fuel pump non-return valve.

=> Rep. Gr. 20; Removing and installing parts of fuel system; checking fuel pump

If the pressure drops again:

- -> Open pressure gauge V.A.G 1318 shut-off tap (handle in direction of flow).
- Start the engine and run at idling speed.

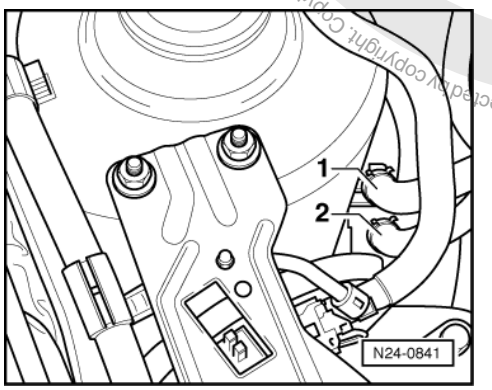


- -> Switch ignition off after the pressure has build-up. At the same time clamp-off the return hose (with blue marking) -2-.

If the pressure does not drop:

- Renew fuel pressure regulator
  =>Page 71 , item 5 .

If the pressure drops again:

- Check pipe connections, O-rings on fuel manifold and injectors for leaks.
- Check pressure gauge for leaks.

***Note:***

*Before removing pressure gauge place a cloth around the connections to be loosened.*

Protected by copyright. Copying for private or commercial purposes, in part or in whole, is not permitted unless authorised by Volkswagen AG. Volkswagen AG does not guarantee or accept any liability with respect to the correctness of information in this document. Copyright by Volkswagen AG.
satelettronica

## 2.11 - Checking intake air system for leaks (unmetered air)

### Checking with engine leak detector spray G 001 800 A1

*Notes:*

- The vacuum in the intake system will cause the leak detector spray to be drawn in with the unmetered air. The leak detector spray reduces the ignitability of the mixture. This leads to a drop in engine speed and to a change of Lambda probe reading.
- The safety precautions listed on the container must be adhered to.

### Special tools, workshop equipment, testers, measuring instruments and auxiliary items required

- Fault reader V.A.G 1551 or vehicle system tester V.A.G 1552 with cable V.A.G 1551/3A
- Engine leak detector spray G 001 800 A1

### Test conditions

- Coolant temperature must be at least 80 °C, =>display group 04, display zone 3.

### Test sequence

- Remove air cleaner => Page 77 , Fig. 3 .
- Connect fault reader V.A.G 1551 (V.A.G 1552). Start engine and select "Address word" 01 of engine control unit. When doing this the engine must be running at idling speed.
  (Connecting fault reader and selecting engine control unit => Page 4 .)

-> Indicated on display:

```
Rapid data transfer        HELP
Select function XXX
```

- Press keys 0 and 8 for the function "Read measured value block" and confirm entry with Q key.

-> Indicated on display:

```
Read measured value block
Input display group number XXX
```

- Press keys 0, 0 and 1 for "Display group number 1" and confirm entry with Q key.

-> Indicated on display:
(1...4 = Display zones)

```
Read measured value block     1
     1     2     3     4
```

Only continue with the test when

- The coolant temperature exceeds 80 °C
  -display zone 2-

- Observe the engine speed in display zone 1 and the Lambda regulation in display zone 3.
- Systematically spray parts of the intake system with engine leak detector spray.

If the engine speed drops or the Lambda regulator changes:

- Press ⇒key.
- Press keys 0 and 6 for the function "End output" and confirm entry with the Q key.
- Switch off ignition.
- Check sprayed areas of intake system for leaks and rectify if necessary.

If the engine speed or Lambda regulator does not change:

- Press ⇒key.
- Press keys 0 and 6 for the function "End output" and confirm entry with the Q key.

Protected by copyright. Copying or private or commercial use is not permitted unless authorised by Volkswagen AG. Volkswagen AG does not guarantee or accept any liability with respect to the correctness of information in this document. Copyright by Volkswagen AG.
satelettronica

- Switch off ignition.

## 2.12 - Checking intake air preheating

**Special tools, workshop equipment, testers, measuring instruments and auxiliary items required**

- Chilling spray (commercially available)

**Checking regulating flap**

- Remove air cleaner => Page 77 , Fig. 3 .

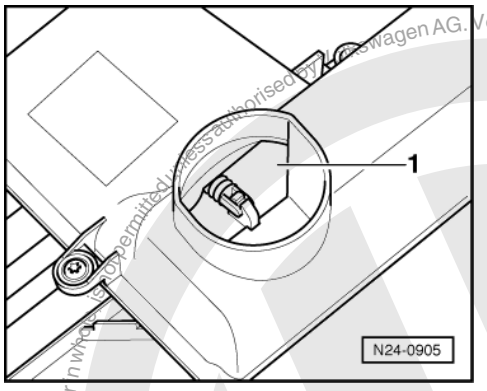


- -> Check control flap position -1-.
  - Above +23 °C flap must close warm air connection
  - Below +10 °C flap opens warm air connection

***Note:***

*The function of the thermo-element can be checked easily by spraying it with a commercial chilling agent, to do this the air intake housing must be removed => Page 74 , Dismantling and assembling air cleaner.*

## 2.13 - Checking vacuum valve

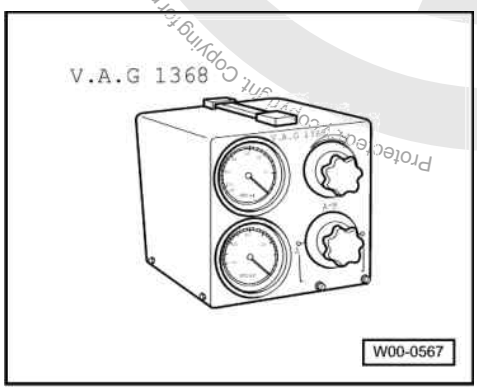


**Special tools, workshop equipment, testers, measuring instruments and auxiliary items required**

- -> V.A.G 1368 Vacuum tester

Volkswagen AG. Volkswagen AG does not guarantee or accept any liability with respect to the correctness of information in this document. Copyright by Volkswagen AG. Protected by copyright. Copying for private or commercial purposes, in part or in whole, is not permitted unless authorised by Volkswagen AG.
satelettronica

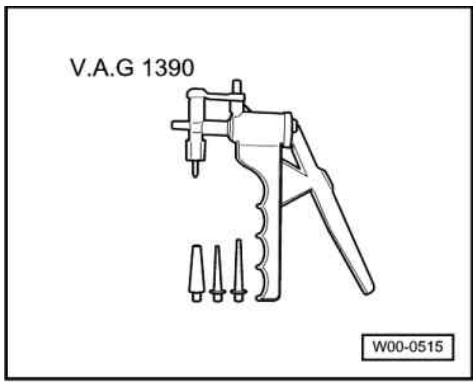


◆ -> V.A.G 1390 Hand vacuum pump

### Test conditions

- Ignition must be switched off

### Test sequence

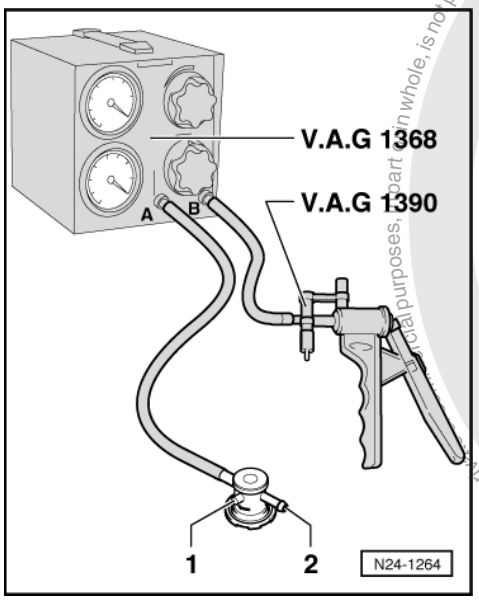


- Remove air cleaner => Page 77 , Fig. 3 .
- -> Remove vacuum valve -1- => Page 68 , item 3.
- Then connect hand vacuum pump V.A.G 1390 and vacuum tester V.A.G 1368 as shown (arrow on vacuum valve -1- points to V.A.G 1368).
- Set vacuum tester to -A/B- position.
- Operate hand vacuum pump V.A.G 1390 several times.
  Vacuum must not
  build up.

***Note:***

*The vacuum valve is open in the rest position.*

If vacuum builds up:

- Renew vacuum valve.

If vacuum does not build up:

Protected by copyright. Copying for private or commercial purposes, in part or in whole, is not permitted unless authorised by Volkswagen AG. Volkswagen AG does not guarantee or accept any liability with respect to the correctness of information in this document. Copyright by Volkswagen AG.
satelettronica

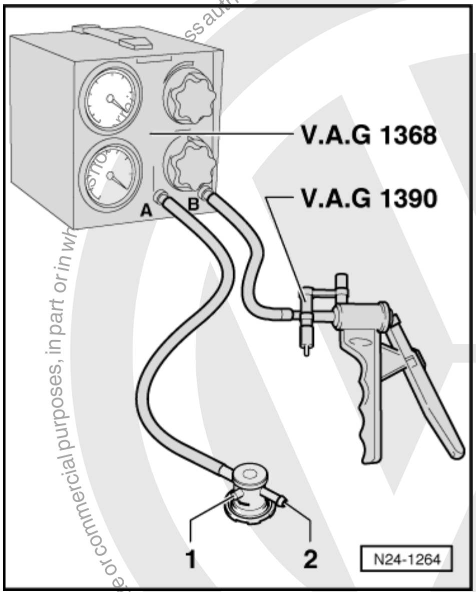


- -> Close connection -2- on vacuum valve.
- Hold vacuum valve in the hand.
- Operate V.A.G 1390 several times, until the valve closes with a noticeable click.

*Note:*

*The vacuum valve closes at a vacuum between 250...350 mbar.*

If vacuum valve does not close:

- Renew vacuum valve.

# 3 - Checking functions

## 3.1 - Checking functions

## 3.2 - Idling check

*Notes:*

- Idling speed, ignition timing and CO content not adjustable.
- The idling speed is regulated to specification by the throttle valve positioner in conjunction with the DIS function.
- CO content regulated by Lambda regulation. Faults in Lambda control are detected in self-diagnosis and stored in fault memory.

**Special tools, workshop equipment, testers, measuring instruments and auxiliary items required**

- Fault reader V.A.G 1551 or vehicle system tester V.A.G 1552 with cable V.A.G 1551/3A

**Check conditions**

- Exhaust system between cylinder head and catalyst free of leaks
- All electrical consumers, e.g. lights and rear window heating must be switched off

Protected by copyright. Copying for private or commercial purposes, in part or in whole, is not permitted unless authorised by Volkswagen AG. Volkswagen AG does not guarantee or accept any liability with respect to the correctness of information in this document. Copyright by Volkswagen AG.

satelettronica

- If the vehicle is equipped with an air conditioning system, this must be switched off.
- Coolant temperature must be at least 80 °C, =>display group 04, display zone 3.

### Test sequence

- Connect fault reader V.A.G 1551 (V.A.G 1552). Start engine and select "Address word" 01 of engine control unit. When doing this the engine must be running at idling speed.
  (Connecting fault reader and selecting engine control unit => Page 4 .)
- Interrogate fault memory, if necessary, repair fault and then erase fault memory.
  => Page 9 , interrogating and erasing fault memory
- Then:
  - Leave fault reader V.A.G 1551 connected.
  - Continue running engine at idling speed.

-> Indicated on display:

```
Rapid data transfer      HELP
Select function XXX
```

- Press keys 0 and 4 for the function "Initiating basic settings" and confirm entry with Q key.

-> Indicated on display:

```
Basic setting
Input display group number XXX
```

- Press keys 0, 0 and 1 for "Display group number 1" and confirm entry with Q key.

-> Indicated on display:
(1...4 = Display zones)

```
System in basic setting     1
     1     2     3     4
```

***Note:***

*In the "System in basic setting" function the tank venting valve (N80) is closed and the air conditioner compressor switched off.*

- Check the adjustment conditions for basic setting in display zone 4:
  Specification: 1x111111
  Significance of the numbers => Page 35
- Briefly increase engine speed (rev- up) and then allow engine to run at idling speed for 2 minutes.

### Checking idling speed

- Change to display group 56 as follows:
- Press C key.
- Press keys 0, 5 and 6 for "Display group number 56" and confirm entry with Q key.

-> Indicated on display:
(1...4 = Display zones)

```
System in basic setting     56
     1     2     3     4
```

- Check operating modes in display zone 4
  Specification: x x 0 x 0
  (Significance => Page 48 )
- Check specified idling speed in display zone 2.
  Specification: 700 rpm
- Check idling speed in display zone 1.
  Specification: 600...800 rpm1)

1) Up-to-date specifications:

satelettronica

=> Exhaust emissions test binder

*Note:*

*During the idling check the tank venting valve (N80) and the air conditioner are switched off and the Lambda regulation learning process is initiated.*

- Press ⇒key.
- Press keys 0 and 6 for the function "End output" and confirm entry with the Q key.

If the idling speed is not obtained:

- Adapt the engine control unit to the throttle valve control part => Page 135
- Carry out test drive.

Observe the valid safety precautions when carrying out a road test => Page 78 .

- Again interrogate the control unit fault memory.
- Repeat the idling check.

If the specifications are not obtained again:

- Check throttle valve control part
  => Page 87 .
- Check the operating condition of engine
  => Page 128 .
- Check intake air system for unmetered air
  => Page 113
- Check the signals from/to air conditioner
  => Page 139 .

## 3.3 - Checking Lambda probe and Lambda regulation before catalyst

### Special tools, workshop equipment, testers, measuring instruments and auxiliary items required

- Fault reader V.A.G 1551 or vehicle system tester V.A.G 1552 with cable V.A.G 1551/3A
- Test box V.A.G 1598/22
- Hand multimeter V.A.G 1526 or multimeter V.A.G 1715
- Adapter set V.A.G 1594
- Current flow diagram

### Check conditions

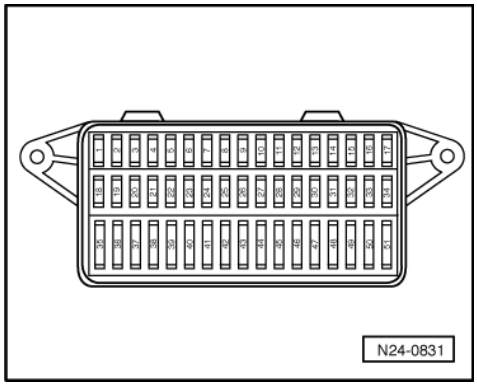


- -> Fuse No. 1 must be OK.
- The battery voltage must be at least 11.5 V.
- Exhaust system between catalyst and cylinder head must be free of leaks
- Coolant temperature must be at least 80 °C, =>display group 04, display zone 3.

Protected copyright. Copyright by Volkswagen AG. Volkswagen AG does not guarantee or accept any liability with respect to the correctness of information in this document. Copyright by Volkswagen AG. Copying for private or commercial purposes, in part or whole, is not permitted unless authorised by Volkswagen AG.
satelettronica

Functional check

- Connect fault reader V.A.G 1551 (V.A.G 1552). Start engine and select "Address word" 01 of engine control unit. When doing this the engine must be running at idling speed.
  (Connecting fault reader and selecting engine control unit => Page 4 .)

-> Indicated on display:

```
Rapid data transfer      HELP
Select function XXX
```

- Press keys 0 and 8 for the function "Read measured value block" and confirm entry with Q key.

-> Indicated on display:

```
Read measured value block
Input display group number XXX
```

- Press keys 0, 3 and 0 for the "Display group number 30" and confirm entry with Q key.

-> Indicated on display:
(1...2 = Display zones)

```
Read measured value block 30
     1     2
```

- Check Lambda control status before catalyst (display zone 1):
  Specification: 1 1 1
  (Significance => Page 42 )

*Notes:*

- The first position of the 3 digit number block fluctuates between 0 and 1 (Lambda probe heating on and off).
- Depending upon the status of the Lambda control the 3 digit number block can show 0 or 1.
- The bits in display zone 1 will not be set to 1 until the catalyst temperature has exceeded 400.0 °C (=> display group 34, display zone 2).

If the specification is not obtained:

- Check the Lambda probe heating before catalyst
  => Page 80 .

If the specification is obtained:

- Change to display group 32 as follows:
- Press C key.

- Press keys 0, 3 and 2 for "Display group number 32" and confirm entry with Q key.

-> Indicated on display:
(1...2 = Display zones)

```
Read measured value block      32
     1     2
```

- Check Lambda learnt values at idling speed (additive) in display zone 1.
  Specification: -10.0...10.0 %
- Check Lambda learnt values at part load (multiplicative) in display zone 2.
  Specification: -10.0...10.0 %

If the specifications are not obtained:

- =>Page 43 , Evaluating display group 32

If the specifications are obtained:

- Change to display group 33 as follows:
  V.A.G 1551: Press key 3

Protected by copyright. Copying for private or commercial purposes, in part or in whole, not permitted unless authorised by Volkswagen AG. Volkswagen AG does not guarantee or accept any liability with respect to the correctness of information in this document. Copyright by Volkswagen AG.
satelettronica

V.A.G 1552: Press key ↑

-> Indicated on display:
(1...2 = Display zones)

```
Read measured value block      33
     1      2
```

- Observe Lambda regulation in display zone 1. The display must fluctuate at least 2 % in the range -10.0...10.0 %
- Press ⇒key.

- Press keys 0 and 6 for the function "End output" and confirm entry with the Q key.
- Switch off ignition.

If the Lambda regulation does not fluctuate in display zone 1:

- Check Lambda probe wiring for Lambda probe 1 => Page 120 .

  Engines conforming to EU 4 standard (engine codes AKP, AUC, AUD) => Page 120 .
  Engines conforming to MVEG II standard (engine codes AKK, ALD) => Page 121 .

If the Lambda regulation in display zone 1 does not fluctuate as stated:

- Carry out road test and burn Lambda probes clean and repeat check.

Observe the valid safety precautions when carrying out a road test => Page 78 .

**Only engines which conform to EU 4 standard (engine code AKP, AUC, AUD)**

If the the specifications in display zone 1 are not obtained even after a test drive, or the value does not fluctuate by at least 2 %:

- Check ageing of the Lambda probe before catalyst =>Page 127 .

**Check Lambda probe wiring Lambda probe 1**

**Only engines which conform to EU 4 standard (engine code AKP, AUC, AUD)**

Engines conforming to MVEG II standard (engine codes AKK, ALD) => Page 121 .

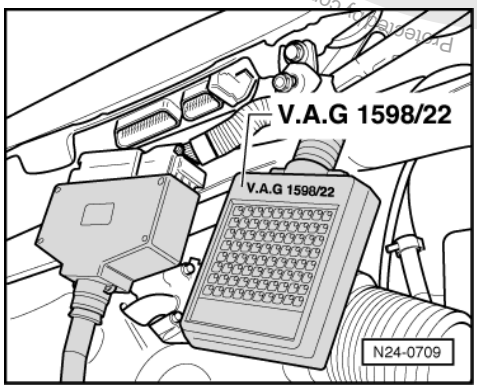


- Remove wiper arms and cowl panel:

=> Electrical system; Repair group 92; windscreen wiper system; removing and installing windscreen wiper system windscreen wiper system removing and installing windscreen wiper system

- -> Connect test box V.A.G 1598/22 to control unit wiring harness.

satelettronica

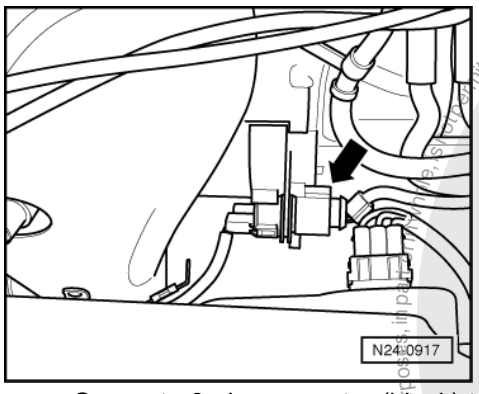


- -> Separate 6-pin connector (black) to Lambda probe before catalyst (G39) -arrow-.

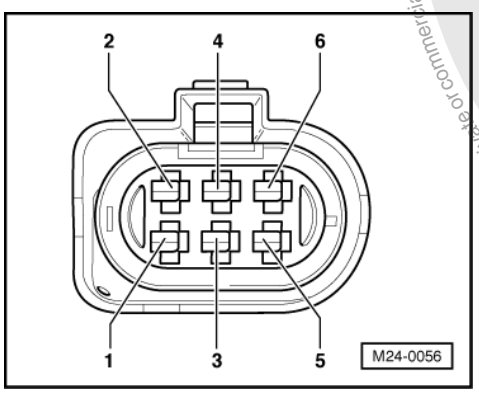


- -> Check wires between test box and 6-pin connector (connector to control unit) for open circuit using current flow diagram.
  Contact 1+socket 46
  Contact 2+socket 34
  Contact 5+socket 20
  Contact 6+socket 35
  Wire resistance: max. 1.5 ω
- Additionally check wires all for short to one another.
  Specification: ∞ω

If no fault is detected in the wiring:

- Renew Lambda probe before catalyst (G39)
  =>Page 64 , item 21 .

**Check Lambda probe wiring Lambda probe 1**

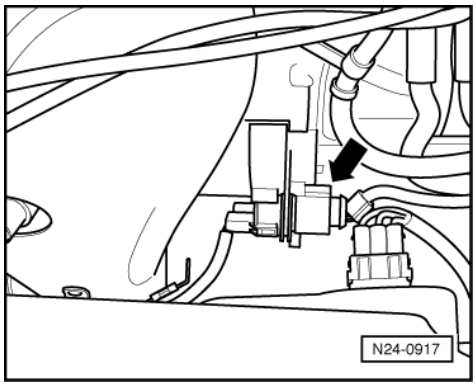


**Only engines conforming to MVEG II standard (engine codes AKK, ALD)**

- -> Separate the 4-pin connector (black) to Lambda probe before catalyst (G39) -arrow-.

Protected by copyright. Copying for private or commercial purposes, in part or in whole, is not permitted unless authorised by Volkswagen AG. Volkswagen AG does not guarantee or accept any liability with respect to the correctness of information in this document. Copyright by Volkswagen AG.
satelettronica

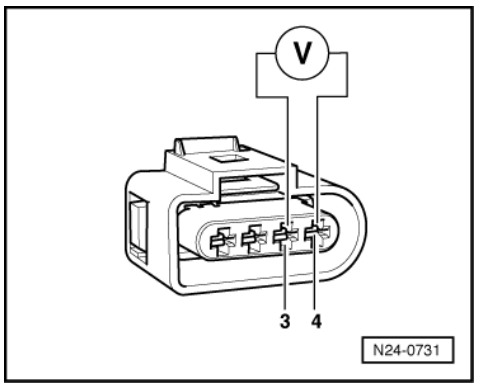


- -> Connect multimeter with aux. cables from V.A.G 1594 to measure voltage at contacts 3+4 (connector to engine control unit).
- Switch on ignition and measure basic voltage.
  Specification: 0.040...0.050 V
- Switch off ignition.

If the specification is obtained:

- Renew Lambda probe before catalyst (G39)
  =>Page 64 , item 21 .

If the specification is not obtained:

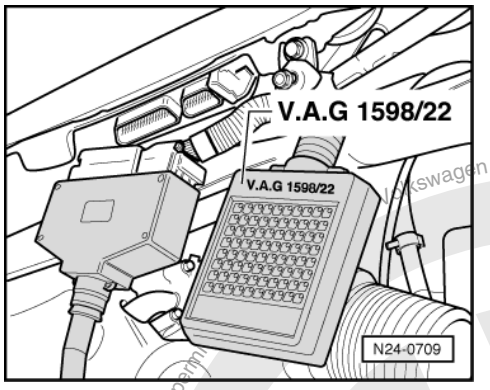


- Remove wiper arms and cowl panel:

=> Electrical system; Repair group 92; windscreen wiper system; removing and installing windscreen wiper system windscreen wiper system removing and installing windscreen wiper system

- -> Connect test box V.A.G 1598/22 to control unit wiring harness.

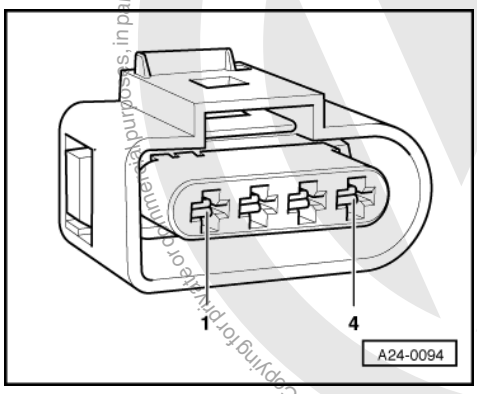


- -> Check wiring between test box and 4 pin connector (to control unit) for open circuit according to current flow diagram.
  Contact 3+socket 21
  Contact 4+socket 47
  Wire resistance: max. 1.5 ω

Protected by copyright. Copyright by Volkswagen AG. Volkswagen AG does not guarantee or accept any liability with respect to the correctness of information in this document. Copying for private or commercial purposes, in part or in whole, is not permitted.
satelettronica

- Check wiring at connector contacts 3+4 for short circuit to contacts 1+2 according to current flow diagram.
  Specification: ∞ω

If no fault is detected in the wiring:

- Renew Lambda probe before catalyst (G39)
  =>Page 64 , item 21 .

## 3.4 - Checking Lambda probe and Lambda regulation after catalyst

### Only engines which conform to EU 4 standard (engine code AKP, AUC, AUD)

*Note:*

*Only gold-plated contacts may be used when servicing Lambda probe connector contacts 3 and 4.*

### Special tools, workshop equipment, testers, measuring instruments and auxiliary items required

- Fault reader V.A.G 1551 or vehicle system tester V.A.G 1552 with cable V.A.G 1551/3A
- Test box V.A.G 1598/22
- Hand multimeter V.A.G 1526 or multimeter V.A.G 1715
- Adapter set V.A.G 1594
- Current flow diagram

### Check conditions

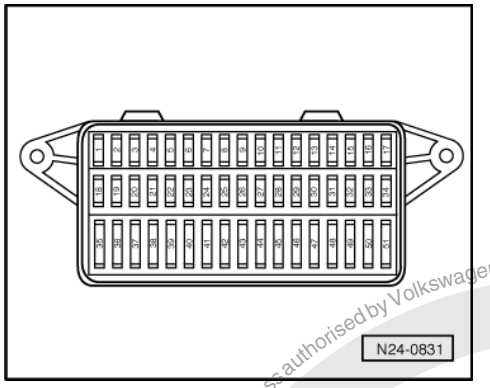


- -> Fuse No. 1 must be OK.
- The battery voltage must be at least 11.5 V.
- Exhaust system between catalyst and cylinder head must be free of leaks
- Coolant temperature must be at least 80 °C, =>display group 04, display zone 3.

### Functional check

- Connect fault reader V.A.G 1551 (V.A.G 1552). Start engine and select "Address word" 01 of engine control unit. When doing this the engine must be running at idling speed.
  (Connecting fault reader and selecting engine control unit => Page 4 .)

-> Indicated on display:

```
Rapid data transfer      HELP
Select function XXX
```

- Press keys 0 and 4 for the function "Introduction of basic setting" and confirm entry with Q key.

-> Indicated on display:

```
Basic setting
Input display group number XXX
```

Protected by copyright. Copying for private or commercial purposes, in part or in whole, is not permitted unless authorised by Volkswagen AG. Volkswagen AG does not guarantee or accept any liability with respect to the correctness of information in this document. Copyright by Volkswagen AG.
satelettronica

- Press keys 0, 3 and 7 for "Display group number 37" and confirm entry with Q key.

-> Indicated on display:
(1...4 = Display zones)

```
System in basic setting     37
     1     2     3     4
```

- Depress brake pedal.

  The engine speed is increased by the control unit to approx. 1100...1300 rpm.

- Maintain the increased engine speed until the display in display zone 4 shows the specification "B1-P2 OK.

***Note:***

*This process can take a few minutes.*

- Press C key.

  The engine speed decreases to idling speed.

-> Indicated on display:

```
Basic setting
Input display group number XXX
```

- Press keys 0, 3 and 0 for the "Display group number 30" and confirm entry with Q key.

-> Indicated on display:
(1...2 = Display zones)

```
Read measured value block     30
     1     2
```

- Check Lambda control status after catalyst (display zone 2):
  Specification: 1 1 1
  (Significance => Page 42 )

***Notes:***

- The first position of the 3 digit number block fluctuates between 0 and 1 (Lambda probe heating on and off).
- Depending upon the status of the Lambda control the 3 digit number block can show 0 or 1.
- The bits in display zone 1 will not be set to 1 until the catalyst temperature has exceeded 400.0 °C (=> display group 34, display zone 2).

If the specification is not obtained:

- Check Lambda probe heating after catalyst=> Page 84 .

If the specification is obtained:

- Change to display group 36 as follows:
- Press C key.

-> Indicated on display:

```
Basic setting
Input display group number XXX
```

- Press keys 0, 3 and 6 for "Display group number 36" and confirm entry with Q key.

-> Indicated on display:
(1...4 = Display zones)

Copyright by Volkswagen AG. Volkswagen AG does not guarantee or accept any liability with respect to the correctness of information in this document. Copyright by Volkswagen AG. Protected by copyright. Copying for private or commercial purposes, in part or in whole, is not permitted unless authorised by Volkswagen AG.
satelettronica

```
System in basic setting 36
     1     2     3     4
```

- Depress brake pedal.

  The engine speed is increased by the control unit to approx. 1100...1300 rpm.

- Check the Lambda probe voltage after catalyst in display zone 1:
  Specification: 0.000...1.000 V
  (can fluctuate slightly)

If the display in display zone 1 remains constant:

- Press ⇒key.
- Press keys 0 and 6 for the function "End output" and confirm entry with the Q key.
- Switch off ignition.
- Continue check according to following table.

| Appears on display | Possible fault cause | Fault elimination |
|---|---|---|
| Constant 1.085 V | - Short to positive via:<br>- Lambda probe, probe wiring, earth wiring, engine control unit | - Check Lambda probe 2 basic voltage<br>=> Page 126 |
| Constant between 0.400...0.500 V | - Open circuit via:<br>- Lambda probe, probe wiring, earth wiring, engine control unit | |
| Constant 0.000 V | - Short to earth via:<br>- Lambda probe, probe wiring, earth wiring, engine control unit | |

- Run the engine at increased speed until the display in display zone 4 jumps from "Test OFF" to"Test ON. The catalyst temperature in display zone 2 must be min. 400 °C.
- Maintain the increased engine speed until the display in display zone 4 shows the specification "B1-P2 OK.

If display zone 4 shows "B1-P2 n.OK":

- Press ⇒key.

- Press keys 0 and 6 for the function "End output" and confirm entry with the Q key.
- Check exhaust system for leaks:

=> Repair group 26; Removing and installing parts of exhaust system Removing and installing parts of exhaust system

- Carry out a test drive to remove possible residue on Lambda probe and repeat check.

Observe the valid safety precautions when carrying out a road test => Page 78 .

If the specifications are again not attained:

- Replace the Lambda probe after catalyst (G130) => Page 63 , item 20 .

Volkswagen AG. Volkswagen AG does not guarantee or accept any liability with respect to the correctness of information in this document. Copyright by Volkswagen AG.
satelettronica

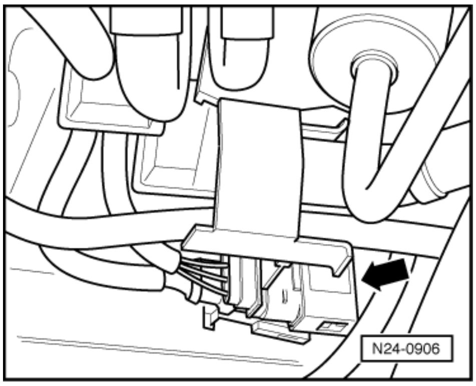


**Checking Lambda probe 2 basic voltage**

- -> Separate 4-pin connector (black) to Lambda probe after catalyst (G130) -arrow-.

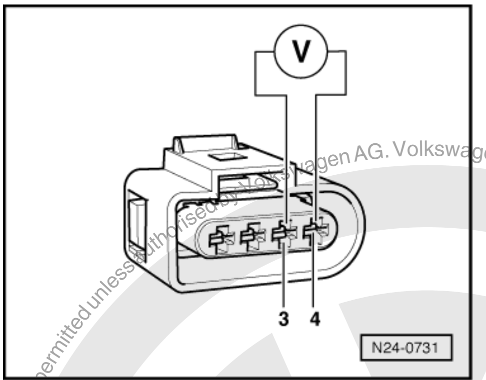


- -> Connect multimeter with aux. cables from V.A.G 1594 to measure voltage at contacts 3+4 (connector to engine control unit).
- Start engine and measure the basic voltage.
  Specification: 0.400...0.500 V
- Switch off ignition.

If the specification is not obtained:

- Check Lambda probe wiring for Lambda probe 2 => Page 126 .

If the specification is obtained:

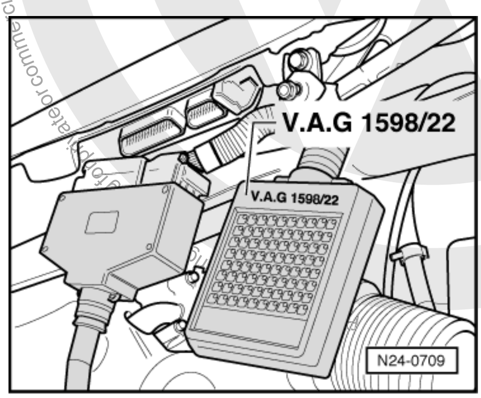


- Replace the Lambda probe after catalyst (G130) => Page 63 , item 20 .

**Checking Lambda probe wiring Lambda probe 2**

- Remove wiper arms and cowl panel:

Protected by copyright. Copying for private or commercial purposes, in part or in whole, is not permitted unless authorised by Volkswagen AG. Volkswagen AG does not guarantee or accept any liability with respect to the correctness of information in this document. Copyright by Volkswagen AG.
sateletronica

=> Electrical system; Repair group 92; windscreen wiper system; removing and installing windscreen wiper system windscreen wiper system removing and installing windscreen wiper system

- -> Connect test box V.A.G 1598/22 to control unit wiring harness.

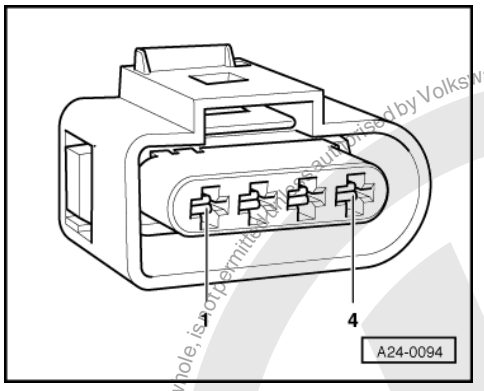


- -> Check wires between test box and 4-pin connector (connector to control unit) for open circuit using current flow diagram.
  Contact 3+socket 21
  Contact 4+socket 47
  Wire resistance: max. 1.5 ω
- Check wiring at connector contacts 3+4 for short circuit to contacts 1+2 using current flow diagram.
  Specification: ∞ω

If no fault is detected in the wiring:

- Replace the Lambda probe after catalyst (G130) => Page 63 , item 20 .

## 3.5 - Checking ageing of Lambda probe before catalyst

**Only engines which conform to EU 4 standard (engine code AKP, AUC, AUD)**

**Special tools, workshop equipment, testers, measuring instruments and auxiliary items required**

◆ Fault reader V.A.G 1551 or vehicle system tester V.A.G 1552 with cable V.A.G 1551/3A

**Test conditions**

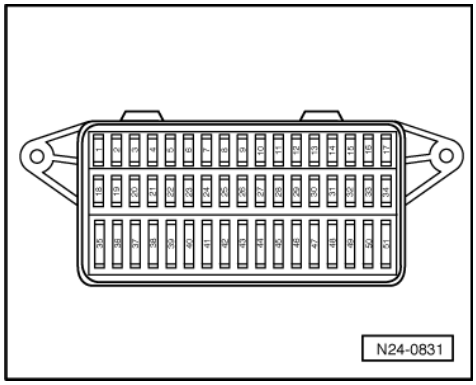


- -> Fuse No. 1 must be OK.
- Exhaust system between catalyst and cylinder head must be free of leaks
- Coolant temperature must be at least 80 °C, =>display group 04, display zone 3.

**Functional check**

- Connect fault reader V.A.G 1551 (V.A.G 1552). Start engine and select "Address word" 01 of engine control unit. When doing this the engine must be running at idling speed.

Protected by copyright. Copyright by Volkswagen AG. Volkswagen AG does not guarantee or accept any liability with respect to the correctness of information in this document. Copyright by Volkswagen AG. Protected by copyright. Copying for private or commercial purposes, in whole or in part, is not permitted unless authorised by Volkswagen AG.
satelettronica

(Connecting fault reader and selecting engine control unit => Page 4 .)

-> Indicated on display:

```
Rapid data transfer      HELP
Select function XXX
```

- Press keys 0 and 4 for the function "Introduction of basic setting" and confirm entry with Q key.

-> Indicated on display:

```
Basic setting
Input display group number XXX
```

- Press keys 0, 3 and 4 for "Display group number 34" and confirm entry with Q key.

-> Indicated on display:
(1...4 = Display zones)

```
System in basic setting      34
     1     2     3     4
```

- Depress brake pedal.

  The engine speed is increased by the control unit to approx. 1100...1300 rpm.

- Maintain the engine speed until the display in display zone 4 jumps from "Test OFF" to "Test ON". The catalyst temperature in display zone 2 must be min. 400 °C.

***Note:***

*This process can take a few minutes.*

- Check amplitude duration in display zone 3:
  Specification: 0.7...2.00
- Continue to maintain engine speed until the specification "B1-P1" appears in display zone 4.
- Press ⇒key.
- Press keys 0 and 6 for the function "End output" and confirm entry with the Q key.

If the specifications are not attained:

- Carry out a road test to free Lambda probe of possible residues and repeat the test.

Observe the valid safety precautions when carrying out a road test => Page 78 .

If the specifications are again not attained:

- Renew Lambda probe before catalyst (G39)
  =>Page 64 , item 21 .

## 3.6 - Checking engine operating mode

***Note:***

*Checks whether engine control unit recognises the engine operating modes idling, overrun, part throttle, enrichment, full throttle.*

**Special tools, workshop equipment, testers, measuring instruments and auxiliary items required**

- Fault reader V.A.G 1551 or vehicle system tester V.A.G 1552 with cable V.A.G 1551/3A

Copyright. Copyright by Volkswagen AG. Volkswagen AG does not guarantee or accept any liability with respect to the correctness of information in this document. Copyright by Volkswagen AG. Protected by copyright. Copying for private or commercial purposes, in part or in whole, is not permitted unless authorised by Volkswagen AG.
satelettronica

### Test conditions

- Coolant temperature must be at least 80 °C, =>display group 04, display zone 3.

### Test sequence

- Connect fault reader V.A.G 1551 (V.A.G 1552). Start engine and select "Address word" 01 of engine control unit. When doing this the engine must be running at idling speed.
  (Connecting fault reader and selecting engine control unit => Page 4 .)

-> Indicated on display:

```
Rapid data transfer      HELP
Select function XXX
```

- Press keys 0 and 8 for the function "Read measured value block" and confirm entry with Q key.

-> Indicated on display:

```
Read measured value block
Input display group number XXX
```

- Press keys 0, 0 and 5 for "Display group number 5" and confirm entry with Q key.

-> Indicated on display:
(1...4 = Display zones)

```
Read measured value block 5
     1     2     3     4
```

- Check whether the control unit recognises the operating mode (display zone 4):

◆ Idling:

As long as the engine is running at idling speed idling must be displayed
Display: Idling

◆ Overrun mode:

- Increase engine speed to above 3000 rpm.
- Close throttle abruptly.

As long as the engine speed is above 1400 rpm overrun must be displayed
Display: Overrun

***Note:***

*Below 1400 rpm idling speed will be recognised.*

◆ Part throttle:

- Rev up evenly.

As long as the engine is being revved up evenly, part throttle must be displayed
Display: Part throt.

◆ Enrichment:

- Floor accelerator pedal (onto throttle valve stop).

Acceleration enrichment must be displayed briefly
Display: Enrichment

◆ Full throttle:

- Floor accelerator pedal (onto throttle valve stop).

Protected by copyright. Copyright by Volkswagen AG. Volkswagen AG does not guarantee or accept any liability with respect to the correctness of information in this document. Copyright by Volkswagen AG. Copying for private or commercial purposes, in part or in whole, is not permitted unless authorised by Volkswagen AG.
satelettronica

Full throttle must be displayed briefly
Display: Full throttle

*Note:*

*A test drive may have to be performed to show "Full throttle" in display.*

Observe the valid safety precautions when carrying out a road test => Page 78 .

- Press => key.
- Press keys 0 and 6 for the function "End output" and confirm entry with the Q key.

If the specifications are not attained:

- Interrogate fault memory, if necessary, repair any faults and then erase fault memory => Page 9 , interrogating and erasing fault memory.
- Check throttle valve control part => Page 87 .
- Check parts of the electronic throttle control (EPC) for ease of movement:

=> Repair group 20; Electronic throttle control (EPC); Servicing parts of the electronic throttle control (EPC)
Electronic throttle control (EPC) Servicing parts of the electronic throttle control (EPC)

# 4 - Engine control unit

## 4.1 - Engine control unit

## 4.2 - Checking control unit voltage supply

### Special tools, workshop equipment, testers, measuring instruments and auxiliary items required

- Fault reader V.A.G 1551 or vehicle system tester V.A.G 1552 with cable V.A.G 1551/3A
- Test box V.A.G 1598/22
- Hand multimeter V.A.G 1526 or multimeter V.A.G 1715
- Adapter set V.A.G 1594
- Current flow diagram

### Check conditions

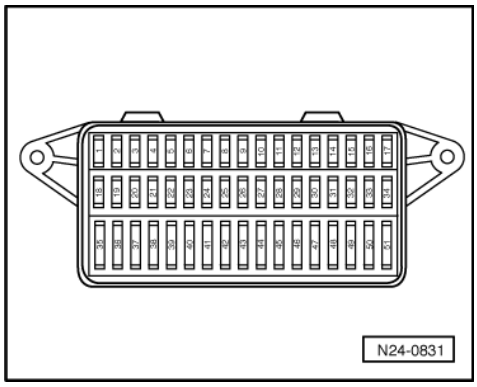


- -> Fuses No. 31 and 36 must be OK.
- Earth connection between engine (on gearbox bell housing) and body (below battery) OK.
- Earth connection in plenum chamber OK.

Protected by copyright. Copyright by Volkswagen AG. Volkswagen AG does not guarantee or accept any liability with respect to the correctness of information in this document. Copying for private or commercial purposes, in part or in whole, is not permitted unless authorised by Volkswagen AG.
satelettronica

- The battery voltage must be at least 11.5 V.

- All electrical consumers, e.g. lights and rear window heating must be switched off.
- If the vehicle is equipped with an air conditioning system, this must be switched off.
- Alternator OK, checking:

=> Current flow diagrams, Electrical fault finding and Fitting locations

**Test sequence**

- Connect fault reader V.A.G 1551 (V.A.G 1552). Start engine and select "Address word" 01 of engine control unit. When doing this the engine must be running at idling speed.
  (Connecting fault reader and selecting engine control unit => Page 4 .)

-> Indicated on display:

```
Rapid data transfer      HELP
Select function XXX
```

- Press keys 0 and 8 for the function "Read measured value block" and confirm entry with Q key.

-> Indicated on display:

```
Read measured value block
Input display group number XXX
```

- Press keys 0, 0 and 4 for "Display group number 4" and confirm entry with Q key.

-> Indicated on display:
(1...4 = Display zones)

```
Read measured value block 4
     1     2     3     4
```

- Read off figure displayed in display zone 2.
  Specification: At least 11.5 V
- Press the ⇒key.
- Press keys 0 and 6 for the "End output" function and confirm input with the Q key.
- Switch off ignition.

If the specification is not attained:

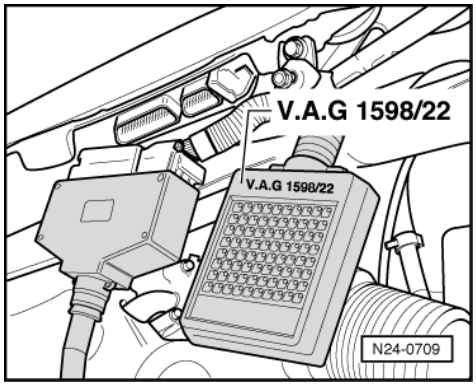


- Remove wiper arms and cowl panel:

=> Electrical system; Repair group 92; windscreen wiper system; removing and installing windscreen wiper system windscreen wiper system removing and installing windscreen wiper system

- -> Connect test box V.A.G 1598/22 to control unit wiring harness.

**Checking voltage supply terminal 30**

- Measure voltage supply with multimeter and aux. cables from V.A.G 1594 between test box sockets 2+15 and 15+28:

satelettronica

Specification: min. 11.5 V

If the specification is not attained:

- Check wiring connections to relay plate according to current flow diagram.

=> Current flow diagrams, Electrical fault finding and Fitting locations

**Checking voltage supply terminal 15**

- Measure voltage supply with multimeter and aux. cables from V.A.G 1594 between test box sockets 2+27 and 27+28:
- Switch on ignition.
  Specification: min. 11.5 V

If the specification is not attained:

- Check wiring connections to relay plate according to current flow diagram.

=> Current flow diagrams, Electrical fault finding and Fitting locations

## 4.3 - Procedure after voltage supply open circuit

All values learnt by the engine control unit and the basic setting values as well as the readiness code will be erased if the voltage supply is interrupted. Therefore, depending upon the vehicle mileage it can lead to serious engine running problems.

**Special tools, workshop equipment, testers, measuring instruments and auxiliary items required**

◆ Fault reader V.A.G 1551 or vehicle system tester V.A.G 1552 with cable V.A.G 1551/3A

**Work sequence**

Perform the following operations after voltage supply open circuit:

- Switch ignition on for at least 10 seconds.
- Switch off ignition.
- Adapt the engine control unit to the throttle valve control part => Page 135
- Perform idling check
  => Page 116

***Note:***

*During the idling check the tank venting valve (N80) and the air conditioner are switched off and the Lambda regulation learning process is initiated.*

- Perform a longer test drive until the poor driving characteristics are eliminated.

  During the road test the following operating conditions must be fulfilled:
  - The coolant temperature must exceed 80 °C .
  - When the temperature is reached, the operating conditions
    Idling
    Part throttle
    Full throttle
    Overrun
    must be attained several times.
  - At full throttle the speed must exceed 3500 rpm.

Protected by copyright. Copying for private or commercial purposes, in part or in whole, is not permitted unless authorised by Volkswagen AG. Volkswagen AG does not guarantee or accept any liability with respect to the correctness of information in this document. Copyright by Volkswagen AG.
satelettronica

## 4.4 - Replacing engine control unit

### Special tools, workshop equipment, testers, measuring instruments and auxiliary items required

- Fault reader V.A.G 1551 with cable V.A.G 1551/3A

### Removing

- First print out the control unit identification and thereby the previous control unit coding as follows:
- Connect the fault reader V.A.G 1551 (V.A.G 1552). Then switch ignition on and select engine control unit with the "Address word" 01.
  (Connecting fault reader and selecting engine control unit => Page 4 .)

-> The control unit identification and coding are indicated on the display, e.g.:

```
030906032G     ME 7.5.10     2921
Coding 00031     WSC 00000
```

- Print out the control unit identification by pressing the fault reader print button.
- Press the ⇒key.
- Press keys 0 and 6 for the function "End output" and confirm entry with the Q key.

- Switch off ignition.
- Remove wiper arms and cowl panel:

=> Electrical system; Repair group 92; windscreen wiper system; removing and installing windscreen wiper system windscreen wiper system removing and installing windscreen wiper system

- Unlock engine control unit connector and pull it off.

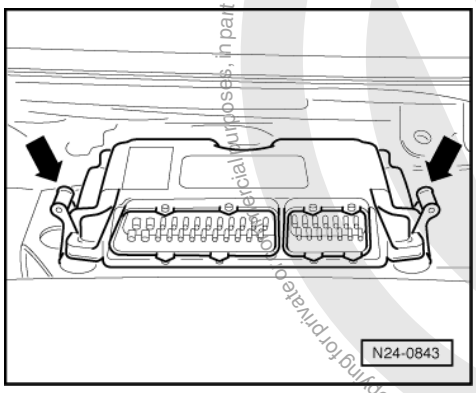


- -> Unclip the control unit from the retaining frame -arrows-.

### Installing

- Place the new control unit into the retaining frame.
- Install control unit connector and lock.
- Check the previous coding and the coding of the new control unit => Page 134 .
- Adapt new control unit to throttle valve control part and exhaust gas recirculation valve => Page 135
- Adapt new control unit to the electronic immobilizer => Page 137

- Then subsequently interrogate the fault memory of the new engine control unit and erase the fault memory if necessary => Page 9 , interrogating and erasing fault memory.
- Perform idling check
  => Page 116

Protected by copyright. Copying for private or commercial purposes, in part or whole, is not permitted unless authorised by Volkswagen AG. Volkswagen AG does not guarantee or accept any liability with respect to the correctness of information in this document. Copyright by Volkswagen AG.
satelettronica

## 4.5 - Coding engine control unit

*Notes:*

- A 5-character code must always be displayed during the control unit identification.
- The control unit must be recoded if the vehicle relevant coding is not displayed or the control unit has been renewed.

**Special tools, workshop equipment, testers, measuring instruments and auxiliary items required**

- Fault reader V.A.G 1551 with cable V.A.G 1551/3

**Work sequence**

- Connect the fault reader V.A.G 1551 (V.A.G 1552). Then switch ignition on and select engine control unit with the "Address word" 01.
  (Connecting fault reader and selecting engine control unit => Page 4 .)

-> Indicated on display:

```
Rapid data transfer      HELP
Select function XXX
```

- Press keys 0 and 7 for the function "Code control unit" and confirm entry with Q key.

-> Indicated on display:

```
Coding control unit      Q
Enter code number XXXXX     (0-32000)
```

- Enter the relevant code number for this vehicle and confirm with Q key.

-> The control unit identification and coding are indicated on the display, e.g.:

```
030906032G     ME 7.5.10     2921
Coding 00031     WSC 00000
```

-> Indicated on display when a non-authorised code number has been entered.

```
Function is not recognised or cannot
□
be performed at the moment.
```

- Press the ⇒key.

- Press keys 0 and 6 for the "End output" function and confirm input with the Q key.
- Switch off ignition.

*Note:*

*The code unit entered and shown on the display will not be used by the Motronic control unit until the ignition has been switched off once.*

*An incorrect coding leads to:*

- Engine running faults (gear change jerks, load change jerks, etc.)
- Increased fuel consumption
- Increased exhaust gas emissions
- Faults stored in fault memory which are not actually present
- Functions will not be performed (Lambda regulation, activation of the activated charcoal filter system, etc.).
- On front wheel drive vehicles the traction control will not function (TC warning lamp comes on)
- Reduced gearbox life

Protected by copyright. Copying for private or commercial purposes, in part or in whole, is not permitted unless authorised by Volkswagen AG. Volkswagen AG does not guarantee or accept any liability with respect to the correctness of information in this document. Copyright by Volkswagen AG.

satelettronica

## 4.6 - Coding variations of engine control unit

| 1st position: Vehicle code | 2nd position: Emissions code | 3rd position: Special code | 4th position: CAN data bus code | 5th position: Gearbox code |
|---|---|---|---|---|
| 0 = No code | 0 = No code | 0 = No code | 0 = No code | 0 = No code |
| 1 = --- | 1 = --- | 1 = --- | 1 = ABS | 1 = 5-speed manual gearbox |
| 2 = --- | 2 = --- | 2 = --- | 2 = Airbag | 2 = 6-speed manual gearbox |
| 3 = --- | 3 = --- | 3 = --- | 3 = ABS and airbag | 3 = Automatic gearbox |

*The code number is compiled as shown in the following example:*

| | | | | | |
|---|---|---|---|---|---|
| 1st position: Vehicle code (no code at present) | 0 | | | | |
| 2nd position: Emissions code (no code at present) | | 0 | | | |
| 3rd position: Special code (no code a present) | | | 0 | | |
| 4th position: CAN data bus code (ABS and airbag) | | | | 3 | |
| 5th position: Gearbox code (5-speed manual gearbox) | | | | | 1 |
| Code number: | 0 | 0 | 0 | 3 | 1 |

## 4.7 - Erasing learnt values and adapting engine control unit to throttle valve control part and exhaust gas recirculation valve

First of all, the old learnt values are erased. This is necessary to neutralise learnt values, which may be at the limit. During adaption (ignition switched on, engine not running), the engine control unit learns various positions of the throttle valve control part and exhaust gas recirculation valve. These positions are stored in the control unit.

Adapting sequence must be performed if:

- The voltage supply is interrupted
- The throttle valve control unit is removed and installed
- The throttle valve control unit is renewed
- The engine control unit is replaced
- If when installing another engine another throttle valve control unit is installed

### Special tools, workshop equipment, testers, measuring instruments and auxiliary items required

- Fault reader V.A.G 1551 or vehicle system tester V.A.G 1552 with cable V.A.G 1551/3A

### Check conditions

- Ignition on, engine not running
- No faults must be stored in fault memory => Page 9 , interrogating and erasing fault memory.
- The battery voltage must be at least 11.5 V.
- If the vehicle is equipped with an air conditioning system, this must be switched off.
- All electrical consumers, e.g. lights and rear window heating must be switched off.
- The throttle valve must be at idling speed position (The accelerator must not be operated during the test).
- Coolant temperature must be 5...50 °C =>display group 04, display zone 3.

### Work sequence

- Connect the fault reader V.A.G 1551 (V.A.G 1552). Then switch ignition on and select engine control unit with the "Address word" 01.
  (Connecting fault reader and selecting engine control unit => Page 4 .)

-> Indicated on display:

Protected by copyright. Copyright by Volkswagen AG. Volkswagen AG does not guarantee or accept any liability with respect to the correctness of information in this document. Copying for private or commercial purposes, in part or in whole, is not permitted unless authorised by Volkswagen AG.
satelettronica

```
Rapid data transfer      HELP
Select function XXX
```

- Press keys 0 and 4 for the function "Initiating basic settings" and confirm entry with Q key.

-> Indicated on display:

```
Basic setting
Input display group number XXX
```

- Press keys 0, 6 and 0 for the "Display group number 60" and confirm entry with Q key.

-> Indicated on display:
(1...4 = display zones)

```
Basic setting      60
     xxx %      xxx %      x      ADP. runs
```

After pressing the Q key the throttle valve positioner is switched so that it is not supplied with voltage at start of test.

In this condition the throttle valve is pulled into an emergency running position by a mechanical spring in the throttle valve control part. The values that both angle senders provide in the emergency running position are stored by the engine control unit.

Thereafter the throttle valve is opened a predetermined value. If this value is achieved, the throttle valve is again switched so that it is not supplied with voltage. Now the mechanical spring must pull the throttle valve to the previously learnt emergency running position within a predetermined period (spring test).

Then the throttle valve is closed by the throttle valve positioner and the values, which are supplied by the angle senders in the throttle valve control part are stored by the engine control unit.

If the engine control unit switches the throttle valve positioner so that it is without voltage during normal operation, this is indicated by the increased and hunting idling speed. The engine reacts slowly to accelerator changes.

-> Indicated on display:
(1...4 = display zones)

```
Basic setting      60
     xxx %      xxx %      8      ADP. OK.
```

Adapting has been performed successfully.

- Terminate engine basic setting at earliest after 30 seconds by pressing the⇒ key.

-> Indicated on display:

```
Rapid data transfer      HELP
Select function XXX
```

**Only engines which conform to EU 4 standard (engine code AKP, AUC, AUD)**

- Press keys 0 and 4 for the function "Initiating basic setting" and confirm entry with Q key.

-> Indicated on display:

```
Basic setting      HELP
Input display group number XXX
```

- Press keys 0, 7 and 4 for the "Display group number 74" and confirm entry with Q key.

-> Indicated on display:
(1...4 = Display zones)

```
Basic setting      74
     xxx V      xxx V      xxx V      ADP.
runs
```

Protected by copyright. Copying for private or commercial purposes, in part or in whole, is not permitted unless authorised by Volkswagen AG. Volkswagen AG does not guarantee or accept any liability with respect to the correctness of information in this document. Copyright by Volkswagen AG.

satelettronica

-> Indicated on display:
(1...4 =Display zones)

```
Basic setting      74
     xxx V      xxx V      xxx V      ADP.
OK
```

Adapting has been performed successfully.

- End the engine basic setting by pressing the⇒ key.

**Continued for all engine codes**

- Press keys 0 and 6 for the function "End output" and confirm entry with the Q key.

To store the values:

- Switch off ignition for at least 25 seconds (control unit run-on).
- On vehicles with automatic gearbox, the gearbox control unit must be adapted.
- Press keys 0 and 6 for the function "End output" and confirm entry with the Q key.

To store the values:

- Switch off ignition.

***Note:***

*If the basic setting of the control unit is interrupted, the cause could be one of the following:*

- Battery voltage too low.
- Throttle valve control unit or wiring is defective. Check => Page 87 .
- Exhaust gas recirculation valve or wiring is defective.

*After an interruption a fault is stored in fault memory. When next switching on ignition the basic setting is automatically performed.*

## 4.8 - Adapting engine control unit to electronic immobilizer

=> Electrical system; Repair group 01; Immobilizer self-diagnosis; Adaption following renewal of engine control unit Immobilizer self-diagnosis Adaption following renewal of engine control unit

# 5 - Checking additional signals

## 5.1 - Checking additional signals

## 5.2 - Checking speed signal

**Special tools, workshop equipment, testers, measuring instruments and auxiliary items required**

- Fault reader V.A.G 1551 or vehicle system tester V.A.G 1552 with cable V.A.G 1551/3A
- Test box V.A.G 1598/22
- Hand multimeter V.A.G 1526 or multimeter V.A.G 1715
- Adapter set V.A.G 1594
- Current flow diagram

Protected by copyright. Copyright by Volkswagen AG. Copying for private or commercial purposes, in part or in whole, is not permitted unless authorised by Volkswagen AG. Volkswagen AG does not guarantee or accept any liability in respect to the correctness of information in this document.
satelettronica

### Check conditions

- The battery voltage must be at least 11.5 V.
- Speedometer must be OK., checking speedometer:

=> Electrical system; Repair group 90

- No faults must be stored in fault memory => Page 9 , interrogating and erasing fault memory.

### Test sequence

*Note:*

*To check the speed signal the vehicle must be driven. To do this a second person is necessary.*

| |
|---|
| Warning!<br>Secure fault reader to rear seat and operate from this position. |

Observe the valid safety precautions when carrying out a road test => Page 78 .

- Connect fault reader V.A.G 1551 (V.A.G 1552). Start engine and select "Address word" 01 of engine control unit. When doing this the engine must be running at idling speed.
  (Connecting fault reader and selecting engine control unit => Page 4 .)

-> Indicated on display:

```
Rapid data transfer      HELP
Select function XXX
```

- Press keys 0 and 8 for the function "Read measured value block" and confirm entry with Q key.

-> Indicated on display:

```
Read measured value block
Input display group number XXX
```

- Press keys 0, 0 and 5 for "Display group number 5" and confirm entry with Q key.

-> Indicated on display:
(1...4 = Display zones)

```
Read measured value block 5
     1      2      3      4
```

- Carry out test drive with a 2nd person to observe display.
- Observe figure displayed in display zone 3:
  Specification: approx. driven speed
- Drive slower. The displayed value must
  decrease.
- Press the ⇒key.
- Press keys 0 and 6 for the "End output" function and confirm input with the Q key.
- Switch off ignition.

If no speed is indicated or the display values reduce when driving slowly:

- Remove wiper arms and cowl panel:

=> Electrical system; Repair group 92; windscreen wiper system; removing and installing windscreen wiper system windscreen wiper system removing and installing windscreen wiper system

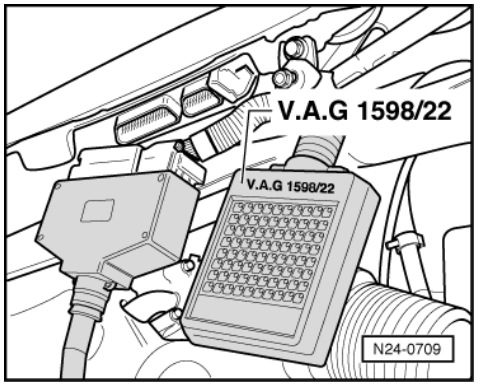


satelettronica

- -> Connect test box V.A.G 1598/22 to control unit wiring harness.
- Connect multimeter to measure voltage between test box sockets 27 (terminal 15) + 5 (speed signal).
- Switch on ignition.
- Lift vehicle at front left.
- Rotate front wheel and observe voltage display.
  Specification: between 0 and at least 4 Volt fluctuating

*Note:*

*If necessary, hold the front right wheel to prevent it from turning.*

If the display does not fluctuate:

- Check wiring to speedometer/speedometer sender:

=> Current flow diagrams, Electrical fault finding and Fitting locations

## 5.3 - Checking signal from/to air conditioning system

### Special tools, workshop equipment, testers, measuring instruments and auxiliary items required

- Fault reader V.A.G 1551 or vehicle system tester V.A.G 1552 with cable V.A.G 1551/3A
- Test box V.A.G 1598/22
- Hand multimeter V.A.G 1526 or multimeter V.A.G 1715
- Adapter set V.A.G 1594
- Current flow diagram

### Test conditions

- All electrical consumers, e.g. lights and rear window heating must be switched off.
- Air conditioner functioning OK.
- Air conditioner must be switched off
- Vehicle at room temperature (warmer than + 15 °C).
- No faults must be stored in fault memory => Page 9 , interrogating and erasing fault memory.

### Test sequence

- Connect fault reader V.A.G 1551 (V.A.G 1552). Start engine and select "Address word" 01 of engine control unit. When doing this the engine must be running at idling speed.
  (Connecting fault reader and selecting engine control unit => Page 4 .)

-> Indicated on display:

```
Rapid data transfer      HELP
Select function XXX
```

- Press keys 0 and 8 for the function "Read measured value block" and confirm entry with Q key.

-> Indicated on display:

```
Read measured value block
Input display group number XXX
```

- Press keys 0, 5 and 0 for "Display group number 50" and confirm entry with Q key.

-> Indicated on display:
(1...4 = Display zones)

```
Read measured value block 50
     1     2     3     4
```

- Observe display in display zone 3. It must show
  A/C-Low.
- Observe display in display zone 4. It must show

Protected by copyright. Copyright by Volkswagen AG. Copyright by Volkswagen AG does not guarantee or accept any liability with respect to the correctness of information in this document. Copyright by Volkswagen AG. Reproduction in part or whole is permitted only with the express written authorisation of Volkswagen AG or communication to third parties is not authorised by Volkswagen AG.
satelettronica

Compr. OFF.

- Switch on air conditioning system.
- Select lowest temperature and highest blower speed.

The display in display zone 3 must change to
A/C-High.
The display in display zone 4 must change to
Compr. ON.

- Floor accelerator pedal quickly and then release (brief burst of throttle).

The display in display zone 4 must change from
Compr.ON
to
Compr. OFF
for a few seconds (compressor switch-off when vehicle is accelerating).

- Press the ⇒key.
- Press keys 0 and 6 for the "End output" function and confirm input with the Q key.
- Switch off ignition.

If the display does not change:

- Remove wiper arms and cowl panel:

=> Electrical system; Repair group 92; windscreen wiper system; removing and installing windscreen wiper system windscreen wiper system removing and installing windscreen wiper system

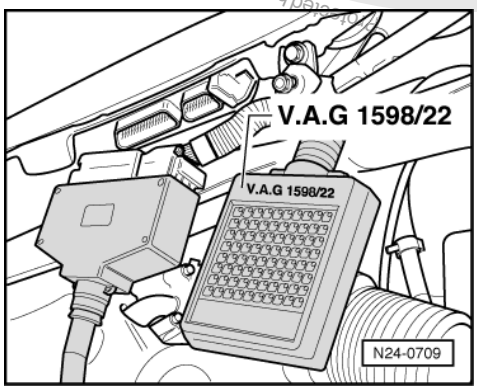


- -> Connect test box V.A.G 1598/22 to control unit wiring harness.
- Check wiring for open circuit between test box sockets 17 + 42 and air conditioner using current flow diagram.
  Wire resistance: max. 1.5 ω

If no fault can be found in the wiring:

- Interrogate fault memory, if necessary, repair any faults and then erase fault memory => Page 9 , interrogating and erasing fault memory.
- Check function of air conditioner control unit.

## 5.4 - Checking signal from brake light switch and brake pedal switch

### Special tools, workshop equipment, testers, measuring instruments and auxiliary items required

- Hand multimeter V.A.G 1526 or multimeter V.A.G 1715
- Adapter set V.A.G 1594
- Test box V.A.G 1598/22
- Current flow diagram

satelettronica

Check conditions

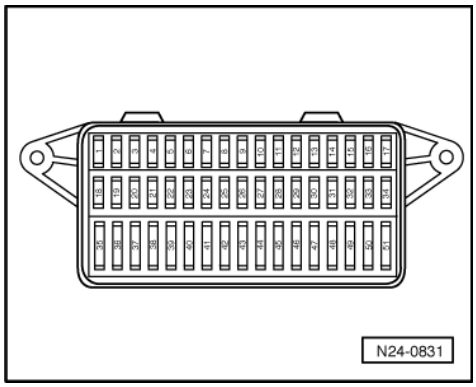


- -> Fuses No. 15 and 24 must be OK.
- The battery voltage must be at least 11.5 V.

Test sequence

*Note:*

*The brake pedal switch (F47) and brake light switch (F) are together in one housing.*

- Pull the connector off brake light/brake pedal switch.

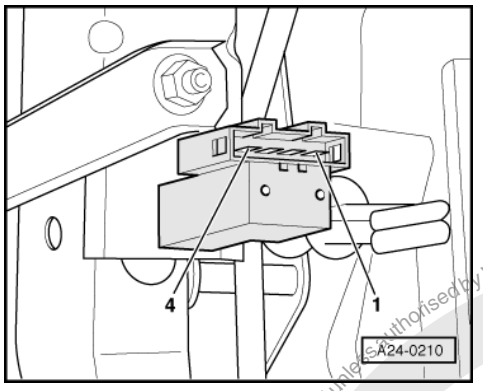


- -> Connect the multimeter to measure resistance between contacts 1 and 4.
  Specification: ∞ ω (no continuity)
- Depress brake pedal.
  Specification: approx. 0 ω
- Connect the multimeter to measure resistance between contacts 2 and 3.
  Specification: approx. 0 ω
- Depress the brake pedal.
  Specification: ∞ ω (no continuity)

If the specifications are not attained:

- Replace the brake light/brake pedal switch.

If the specifications are obtained:

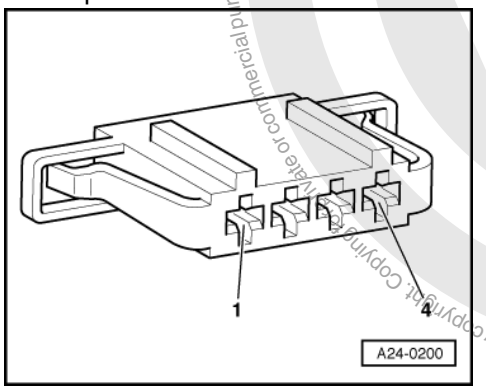


satelettronica
Protected by copyright. Copying for private or commercial purposes, in part or in whole, is not permitted unless authorised by Volkswagen AG. Volkswagen AG does not guarantee or accept any liability with respect to the correctness of information in this document. Copyright by Volkswagen AG.

- -> Connect multimeter to measure voltage between contact 1 and earth.
  Specification: at least 11.5 V
- Switch ignition on.
- Connect the multimeter to measure voltage between contact 2 and earth.
  Specification: at least 11.5 V

If the specifications are not obtained:

- Check the wire between 4-pin connector contact 1 and main fuse/contact 2 and central electrics using current flow diagram.

=> Current flow diagrams, Electrical fault finding and Fitting locations binder

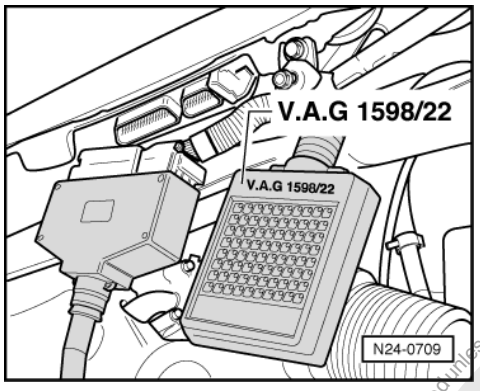


If the specification is obtained:

- Remove wiper arms and cowl panel:

=> Electrical system; Repair group 92; windscreen wiper system; removing and installing windscreen wiper system windscreen wiper system removing and installing windscreen wiper system

- -> Connect test box V.A.G 1598/22 to control unit wiring harness.

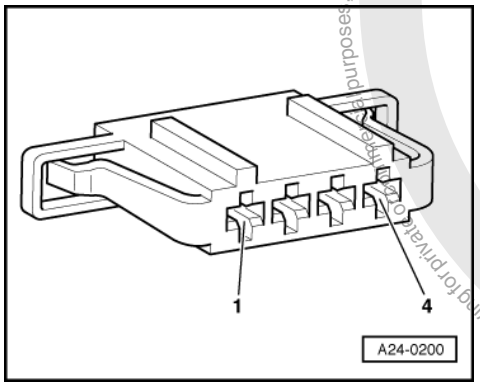


- -> Check wiring for open circuit between test box and 4-pin connector using current flow diagram.
  Contact 3+socket 51
  Contact 4+socket 23
  Wire resistance: Max. 1.5 ω
- Additionally check wires for short to one another.
- Additionally check the wiring for short to battery positive or earth.

Protected by copyright. Copying for private or commercial purposes, in part or in whole, is not permitted unless authorised by Volkswagen AG. Volkswagen AG does not guarantee or accept any liability with respect to the correctness of information in this document. Copyright by Volkswagen AG.
satelettronica

## 5.5 - Checking rpm signal

*Note:*

*The engine rpm signal output is on contact 41 of engine control unit. Amongst other things the signal is necessary for the rev. counter in dash panel insert.*

Copyright by Volkswagen AG. Volkswagen AG does not guarantee or accept any liability with respect to the correctness of information in this document. Copyright by Volkswagen AG. Reproduction, in whole or in part, is not permitted without authorisation by Volkswagen AG. For commercial purposes, in part or in whole, is not permitted without authorisation by Volkswagen AG.

### Special tools, workshop equipment, testers, measuring instruments and auxiliary items required

- Test box V.A.G 1598/22
- Adapter set V.A.G 1594
- Hand multimeter V.A.G 1526 or multimeter V.A.G 1715
- Current flow diagram

### Test conditions

- No faults must be stored in fault memory => Page 9 , interrogating and erasing fault memory.

### Test sequence

- Remove wiper arms and cowl panel:

=> Electrical system; Repair group 92; windscreen wiper system; removing and installing windscreen wiper system windscreen wiper system removing and installing windscreen wiper system

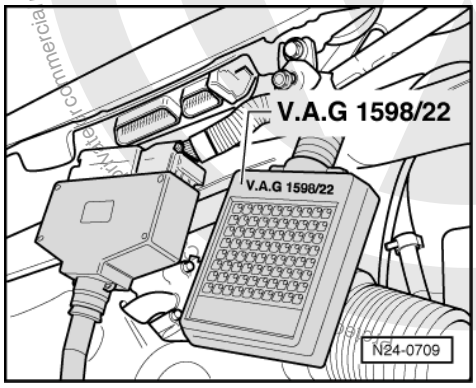


- -> Connect test box V.A.G 1598/22 to control unit wiring harness.
- Check wiring from test box contact 41 to dash panel insert for open circuit using current flow diagram:

=> Current flow diagrams, Electrical fault finding and Fitting locations

## 5.6 - Checking signal from power steering pressure switch

### Special tools, workshop equipment, testers, measuring instruments and auxiliary items required

- Fault reader V.A.G 1551 or vehicle system tester V.A.G 1552 with cable V.A.G 1551/3
- Test box V.A.G 1598/22
- Hand multimeter V.A.G 1526 or multimeter V.A.G 1715
- Adapter set V.A.G 1594
- Current flow diagram

### Test sequence

- Connect fault reader V.A.G 1551 (V.A.G 1552). Start engine and select "Address word" 01 of engine control unit. When doing this the engine must be running at idling speed.
  (Connecting fault reader and selecting engine control unit => Page 4 .)

-> Indicated on display:

satelettronica

```
Rapid data transfer      HELP
Select function XXX
```

- Press keys 0 and 8 for the function "Read measured value block" and confirm entry with Q key.

-> Indicated on display:

```
Read measured value block     HELP
Input display group number XXX
```

- Press keys 0, 5 and 5 for "Display group number 55" and confirm entry with Q key.

-> Indicated on display:

```
Read measured value block 55
     1     2     3     4
```

- Observe values for the power assisted steering pressure switch displayed in display zone 4.
  Specification: 0 x x x
- Turn steering wheel to full lock and observe value displayed in display zone 4 (1st digit from left)
  Specification: 1 x x x
- Press the ⇒key.
- Press keys 0 and 6 for the "End output" function and confirm input with the Q key.
- Switch off ignition.

If the specification is not obtained:

- Connect multimeter V.A.G 1526 to pressure switch contacts.

- Start the engine and run at idling speed. Check pressure switch for continuity.
  Specification: ∞ω
- Turn steering wheel to full lock.
  The pressure switch must switch to continuity.

If the specifications are not attained:

- Renew pressure switch for power assisted steering:

If the specifications are attained:

- Check the wiring
  => Page 144 .

### Checking wiring connections

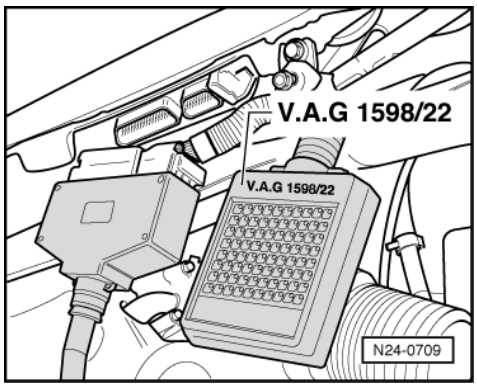


- Remove wiper arms and cowl panel:

=> Electrical system; Repair group 92; windscreen wiper system; removing and installing windscreen wiper system windscreen wiper system removing and installing windscreen wiper system

- -> Connect test box V.A.G 1598/22 to control unit wiring harness.

Protected by copyright. Copying for private or commercial purposes, in part or in whole, is not permitted unless authorised by Volkswagen AG. Volkswagen AG does not guarantee or accept any liability with respect to the correctness of information in this document. Copyright by Volkswagen AG.
satelettronica

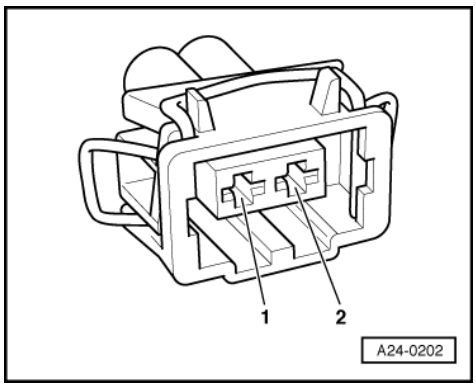


- -> Check wiring between test box and 2-pin connector for open circuit using current flow diagram.
  Contact 1+socket 49
  Contact 2+socket 21
  Wire resistance: Max. 1.5 ω
- Additionally check wires for short to one another.
- Additionally check the wiring for short to battery positive or earth.

If no fault is detected in the wiring:

- Renew engine control unit => Page 133 .

## 5.7 - Checking data bus

Function

Data bus-compatible control units are connected together via two data bus wires twisted together (CAN high and CAN low) and exchange information (messages). Information not available in the data bus will be recognised as a fault by the engine control unit as well as other CAN data bus control units.

Further information:

=> Self study programme No. 186 "The CAN data bus".

### Test conditions

- A fault has been recognised by the CAN data bus self-diagnosis.

### Special tools, workshop equipment, testers, measuring instruments and auxiliary items required

- Test box V.A.G 1598/22
- Hand multimeter V.A.G 1526 or multimeter V.A.G 1715
- Adapter set V.A.G 1594
- Current flow diagram

### Test sequence

- Switch off ignition.
- Unlock engine control unit connector and pull it off.
- Connect test box V.A.G 1598/22 to engine control unit.
- Check centralized matching resistor in engine control unit.
- To do this perform a resistance measurement between the test box sockets
  Sockets 31 + 32 and
  Specification: 60 ...72 ω

### If the resistance measurement is outside the specified range:

- Renew engine control unit => Page 133 .

satelettronica
Copyright by Volkswagen AG. Volkswagen AG does not guarantee or accept any liability with respect to the correctness of information in this document. Copying for private or commercial purposes, in part or in whole, is not permitted unless authorised by Volkswagen AG.

**If the resistance value is within the specified range:**

- Repair the fault in the wiring using current flow diagram:

=> Current flow diagrams, Electrical fault finding and Fitting locations binder

Protected by copyright. Copying for private or commercial purposes, in part or in whole, is not permitted unless authorised by Volkswagen AG. Volkswagen AG does not guarantee or accept any liability with respect to the correctness of information in this document. Copyright by Volkswagen AG.

satelettronica

# 28 - Ignition system

## 1 - Servicing ignition system

### 1.1 - Servicing ignition system

### 1.2 - General notes on ignition system

- Only the components which specifically relate to the ignition system are dealt with here. For the other components of the injection and ignition system => Repair group 24.
- Disconnecting and connecting the battery must only be done with the ignition switched off, otherwise the engine control unit could be damaged.
- The engine control unit is equipped with self diagnosis.
- Components marked with * are checked via the self diagnosis => Page 9 , interrogating and erasing fault memory.
- For trouble-free operation of the electrical components a voltage of at least 11.5 V is necessary.
- Before carrying out repairs and for fault finding, interrogate fault memory => Page 9 , interrogating and erasing fault memory
- During some checks it is possible that the control unit will recognise and store a fault. Therefore after completing all checks and repairs the fault memory must be interrogated and if necessary erased. => Page 9 , interrogating and erasing fault memory

- If the engine starts, runs for a short period and then stops, after fault finding, repairs or component tests, then the fault may lie with the immobilizer which is blocking the engine control unit. The fault memory must be interrogated and if necessary the control unit matched => Page 137 .

Safety precautions => Page 151

Test data, spark plugs => Page 151

Protected by copyright. Copyright for private or commercial purposes, in part or in whole, is not permitted unless authorised by Volkswagen AG. Volkswagen AG does not guarantee or accept any liability with respect to the correctness of information in this document. Copyright by Volkswagen AG.
satelettronica

## 1.3 - Removing and installing parts of the ignition system

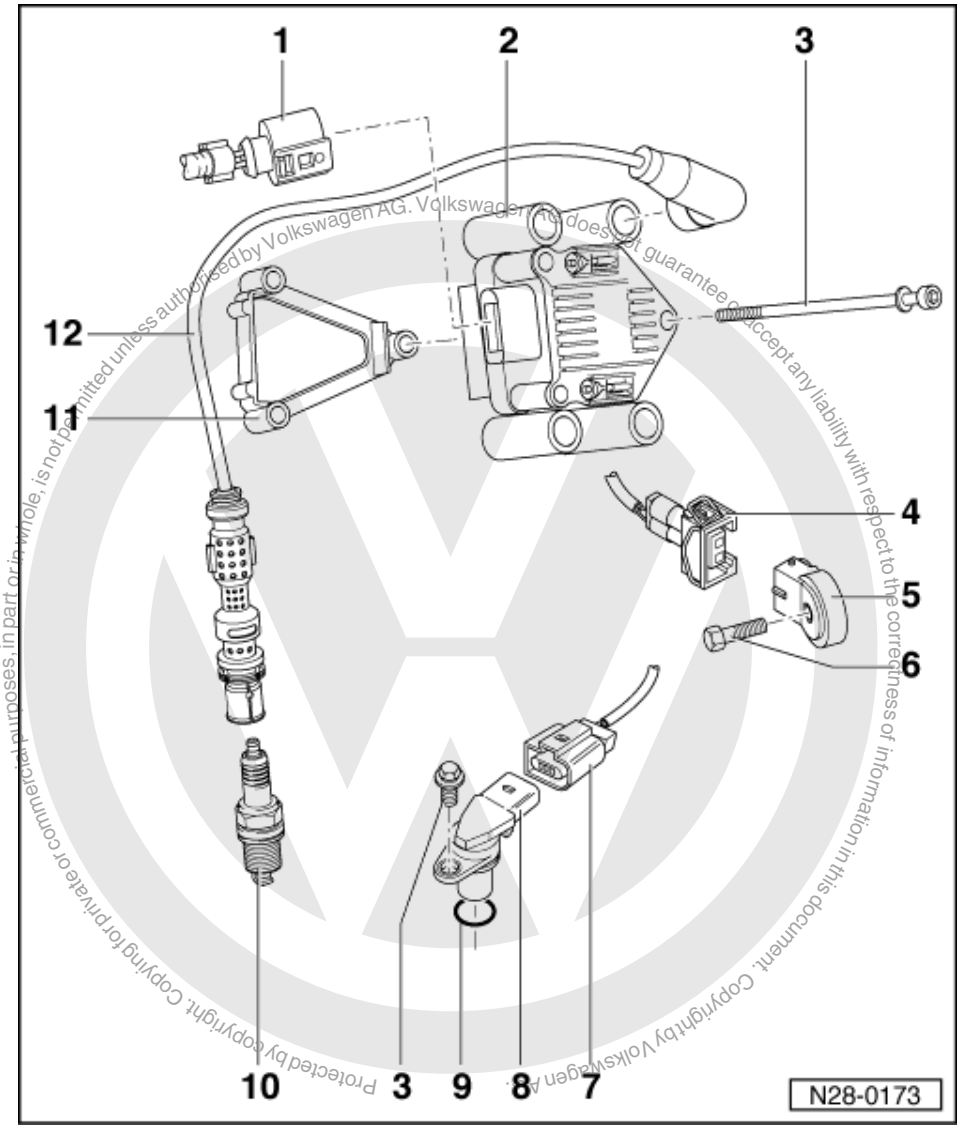


Protected by copyright. Copying for private or commercial purposes, in part or in whole, is not permitted unless authorised by Volkswagen AG. Volkswagen AG does not guarantee or accept any liability with respect to the correctness of information in this document. Copyright by Volkswagen AG.

satelettronica

***Note:***

*Motronic control unit (J220)* with connectors*

*=> Page 54 , item 4 .*

1 **Connector**
- Black, 4 pin
- For ignition transformer (N152)

2 **Ignition transformer (N152)***
- Fitting location => Page 53 , engine compartment overview
- Checking => Page 154
- With marking for ignition cables:
  A = Cylinder 1
  B = Cylinder 3
  C = Cylinder 2
  D = Cylinder 4

3 **10 Nm**

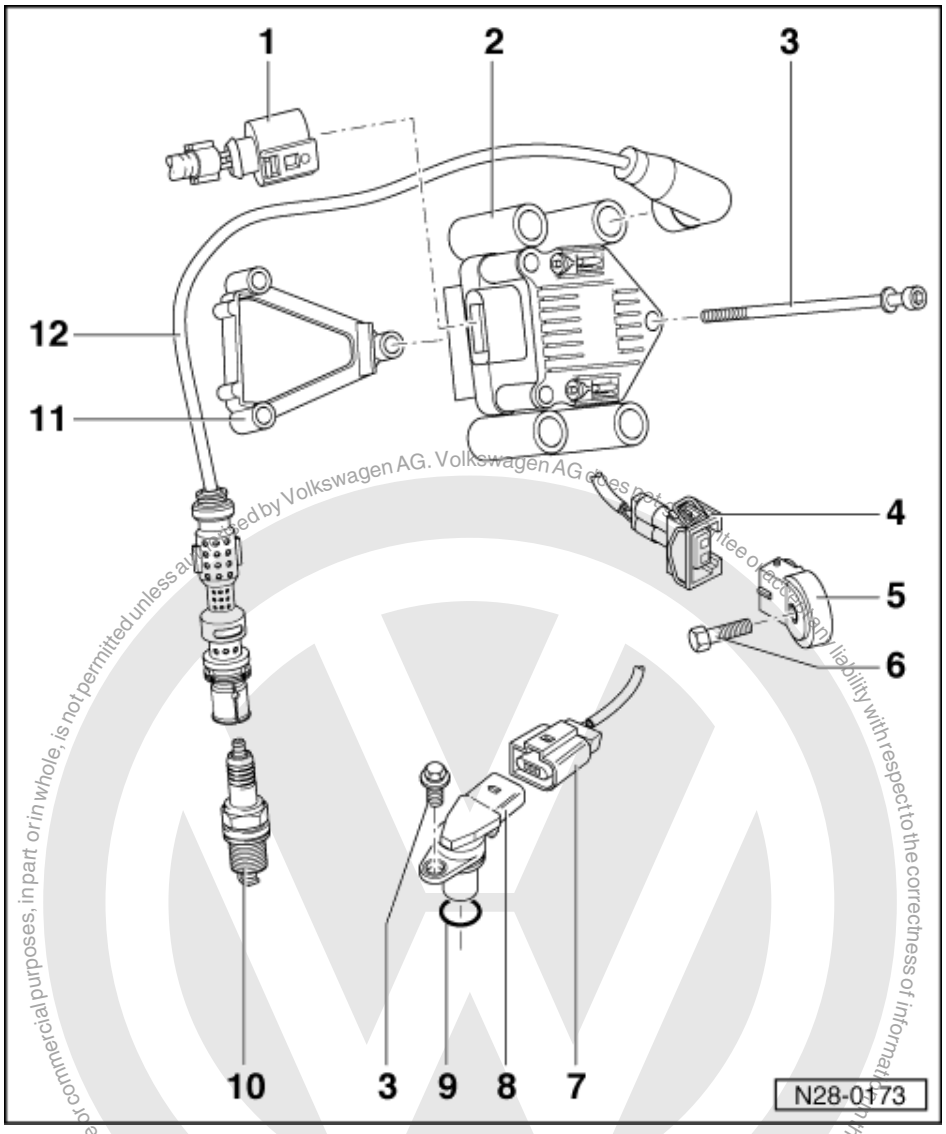


4 Connector
- Black, 2-pin
- For knock sensor 1 (G61)
- Sensor and connector contacts are gold-plated

5 Knock sensor 1 (G61)*
- Fitting location => Page 53 , engine compartment overview
- Checking => Page 157
- Sensor and connector contacts are gold-plated

6 20 Nm
- Tightening torque influences the function of the knock sensor

7 Connector
- Black, 3-pin
- Hall sender (G40)

satelettronica

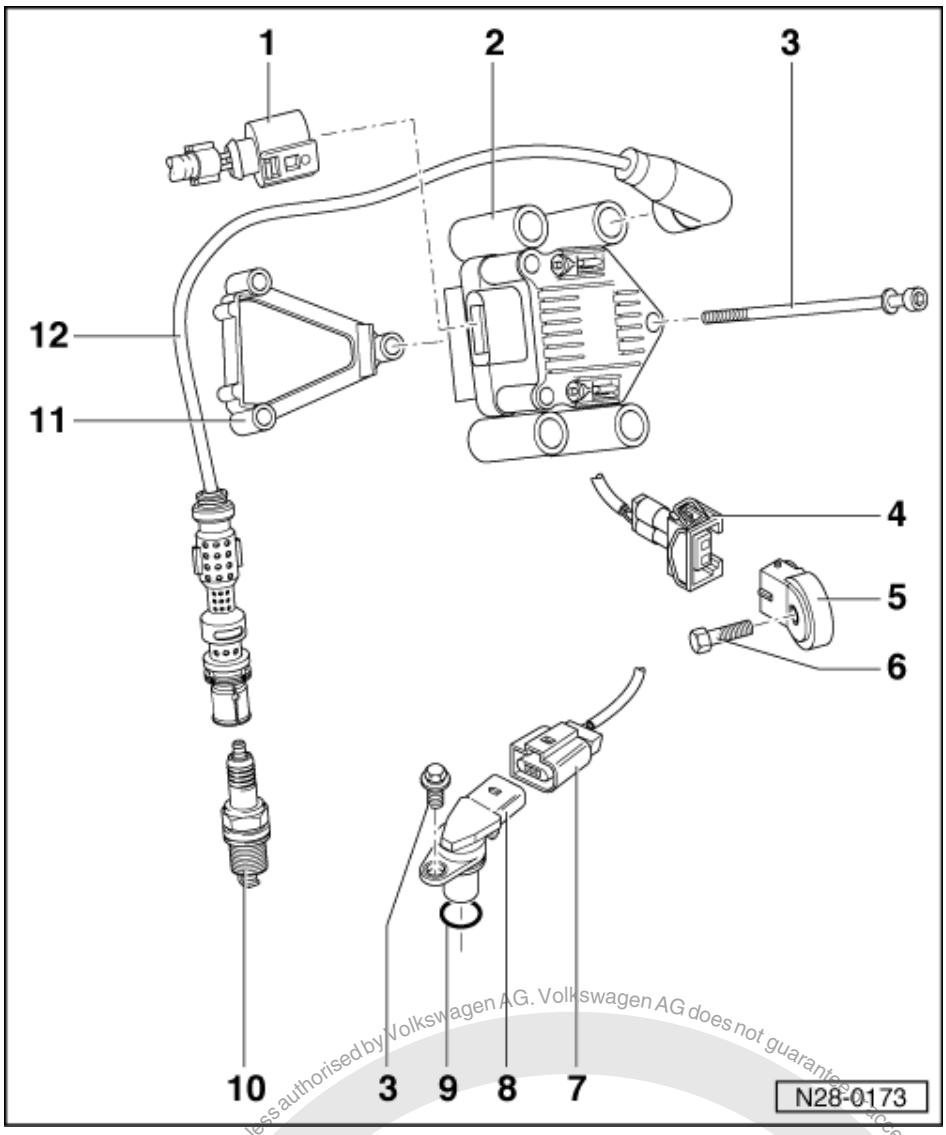


8 Hall sender (G40)*
- Fitting location => Page 53 , engine compartment overview
- Checking => Page 152

9 O-ring
- Renew if damaged

10 Spark plug, 30 Nm
- Remove and install with spark plug spanner 3122B
- Type and electrode gap
  => Page 151 , test data, spark plugs

11 Bracket
- For ignition transformer (N152)

12 H.T. cable
- With suppression connector and spark plug connector
- Resistance 4.8...7.2 kω

Protected by copyright. Copying for private or commercial purposes, in part or in whole, is not permitted unless authorised by Volkswagen AG. Volkswagen AG does not guarantee or accept any liability with respect to the correctness of information in this document. Copyright by Volkswagen AG.
satelettronica

## 1.4 - Safety precautions

To prevent injuries to persons and/or damage to the fuel injection and ignition system, the following must be noted:

- Do not touch or disconnect ignition wiring when the engine is running or being turned at starter speed.
- The ignition must be switched off before connecting or disconnecting injection or ignition system wiring or tester cables.

Observe following if test and measuring instruments are required during a test drive:

- Test and measuring instruments must be secured to rear seat and operated by a 2nd person from this location.

  If test and measuring instruments are operated from front passenger's seat and the vehicle is involved in an accident, there is a possibility that the person sitting in this seat may receive serious injuries when the airbag is triggered.

- If the engine is to be turned at starter speed, without starting:

- Remove air cleaner => Page 77 , Fig. 3 .

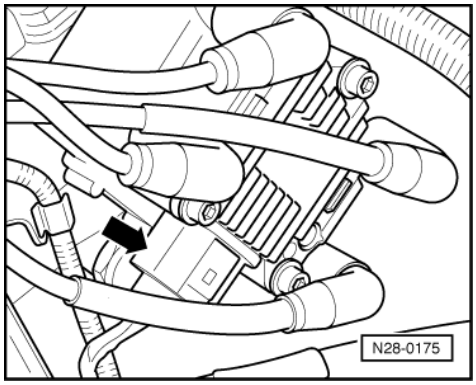


- -> Pull 4 pin connector off ignition transformer -arrow-.

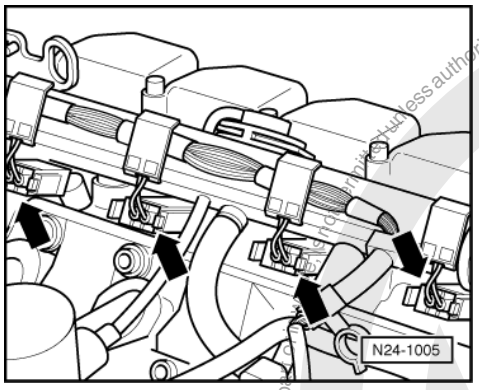


- -> Pull plug -arrows- off all injectors.

## 1.5 - Test data, spark plugs

| Engine code | AKK | AKP | ALD |
|---|---|---|---|
| Firing order | 1-3-4-2 | 1-3-4-2 | 1-3-4-2 |
| Spark plugs 1), 2) | | | |

Protected by copyright. Copying for private or commercial purposes, in part or in whole, is not permitted unless authorised by Volkswagen AG. Volkswagen AG does not guarantee or accept any liability with respect to the correctness of information in this document. Copyright by Volkswagen AG.
satelettronica

| Engine code | AKK | AKP | ALD |
|---|---|---|---|
| VW/Audi<br>Manufacturer's designation | 101 000 062 AB<br>NGK PZFR 5 D-11 | 101 000 062 AB<br>NGK PZFR 5 D-11 | 101 000 062 AB<br>NGK PZFR 5 D-11 |
| Electrode gap | max. 1.0... 1.1 mm | max. 1.0... 1.1 mm | max. 1.0... 1.1 mm |
| Tightening torque | 30 Nm | 30 Nm | 30 Nm |

1) The up-to-date figures and the spark plug change intervals:

=> Exhaust emissions test binder

2) Remove and install spark plugs with 3122B

| Engine code | AUC | AUD |
|---|---|---|
| Firing order | 1-3-4-2 | 1-3-4-2 |
| Spark plugs1), 2)<br>VW/Audi<br>Manufacturer's designation | 101 000 062 AB<br>NGK PZFR 5 D-11 | 101 000 062 AB<br>NGK PZFR 5 D-11 |
| Electrode gap | max. 1.0... 1.1 mm | max. 1.0... 1.1 mm |
| Tightening torque | 30 Nm | 30 Nm |

1) The up-to-date figures and the spark plug change intervals:

=> Exhaust emissions test binder

2) Remove and install spark plugs with 3122B

## 1.6 - Checking Hall sender

### Special tools, workshop equipment, testers, measuring instruments and auxiliary items required

- Test box V.A.G 1598/22
- Hand multimeter V.A.G 1526 or multimeter V.A.G 1715
- Adapter set V.A.G 1594
- Current flow diagram

### Check conditions

- The battery voltage must be at least 11.5 V.
- If the vehicle is equipped with an air conditioning system, this must be switched off.
- All electrical consumers, e.g. lights and rear window heating must be switched off.
- Hall sender screwed on tight

### Test sequence

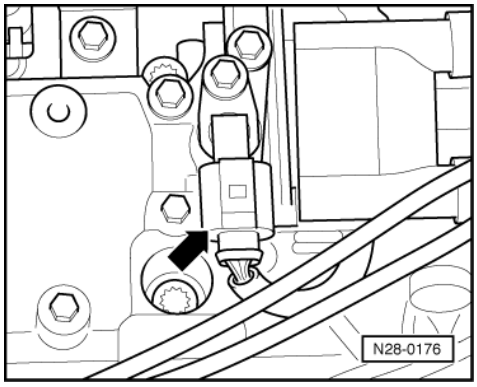


Protected by copyright. Copying for private or commercial purposes, in part or in whole, is not permitted unless authorised by Volkswagen AG. Volkswagen AG does not guarantee or accept any liability with respect to the correctness of information in this document. Copyright by Volkswagen AG.
satelettronica

- -> Pull 3-pin connector off Hall sender -arrow-.

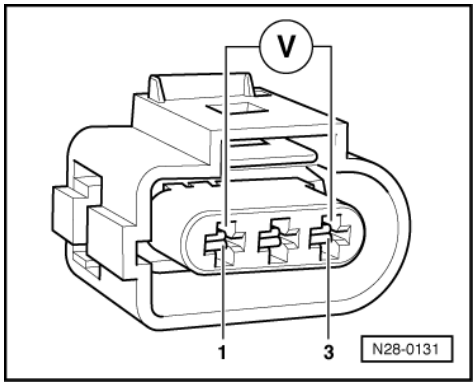


- -> Connect multimeter to measure voltage with adapter cables from V.A.G 1594 to contacts 1 (positive) and 3 (earth) on the Hall sender connector.
- Switch on ignition.
  Specification: min. 4.5 V
- Switch off ignition.

If no voltage is present:

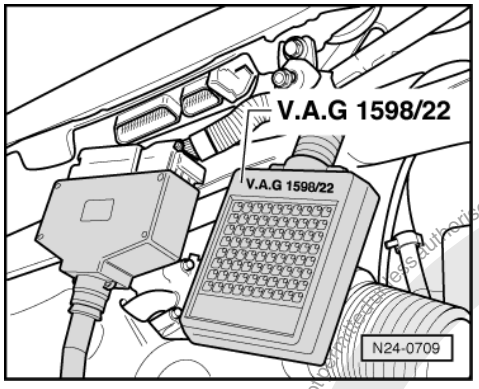


- Remove wiper arms and cowl panel:

=> Electrical system; Repair group 92; windscreen wiper system; removing and installing windscreen wiper system windscreen wiper system removing and installing windscreen wiper system

- -> Connect test box V.A.G 1598/22 to control unit wiring harness.

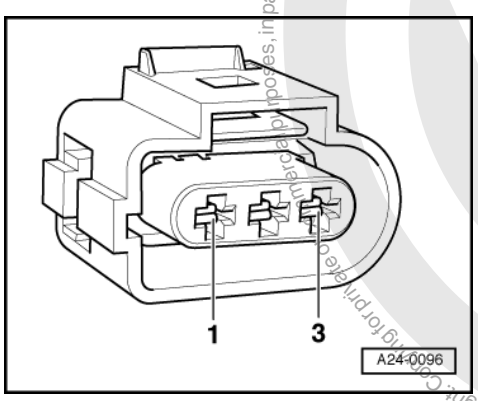


- -> Check wiring between test box and 3-pin connector (connector to control unit) for open circuit using current flow diagram.
  Contact 1+socket 62
  Contact 2+socket 60
  Contact 3+socket 54
  Wire resistance: max. 1.5 ω
- Additionally check wires for short to one another.

satelettronica
Protected by copyright. Copying for private or commercial purposes, in part or in whole, is not permitted unless authorised by Volkswagen AG. Volkswagen AG does not guarantee or accept any liability with respect to the correctness of information in this document. Copyright by Volkswagen AG.

Specification: ∞ω

If no wiring fault is detected and voltage was present between contacts 1+3:

- Renew Hall sender (G40)
  => Page 150 , item 8 .

If no wiring fault is detected and no voltage was present between contacts 1+3:

- Replace engine control unit
  => Page 133 .

## 1.7 - Checking ignition transformer

### Special tools, workshop equipment, testers, measuring instruments and auxiliary items required

- Test box V.A.G 1598/22
- Hand multimeter V.A.G 1526 or multimeter V.A.G 1715
- Adapter set V.A.G 1594
- Diode test lamp V.A.G 1527
- Current flow diagram

### Check conditions

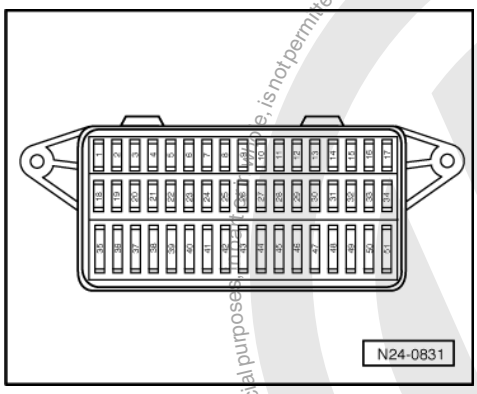


- -> Fuse No. 34 must be OK.
- The battery voltage must be at least 11.5 V.
- If the vehicle is equipped with an air conditioning system, this must be switched off.
- All electrical consumers, e.g. lights and rear window heating must be switched off.
- Hall sender must be OK, checking
  =>Page 152 .
- Engine speed sender must be OK, checking Page 101 .

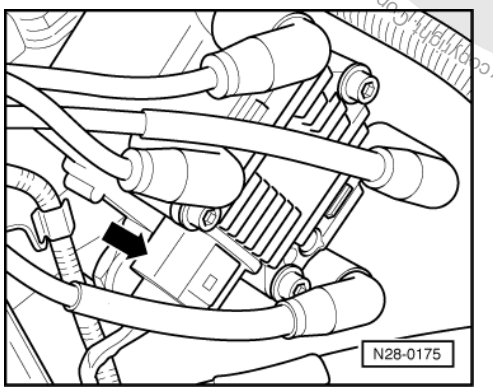


Protected by copyright. Copying for private or commercial purposes, in any form or medium, is not permitted unless authorised by Volkswagen AG. Volkswagen AG does not guarantee or accept any liability with respect to the correctness of information in this document. Copyright by Volkswagen AG.
satelettronica

Test sequence

- Remove air cleaner => Page 77 , Fig. 3 .
- -> Pull 4 pin connector off ignition transformer -arrow-.

Checking voltage supply

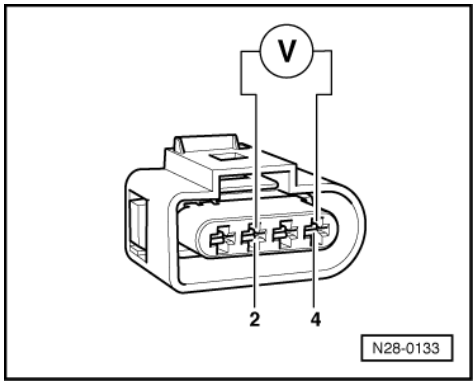


- -> Using multimeter and adapter cables from V.A.G 1594 measure the supply voltage between contacts 2 +4 of disconnected connector.
- Switch on ignition.
  Specification: min. 11.5 V
- Switch off ignition.

If no voltage is present:

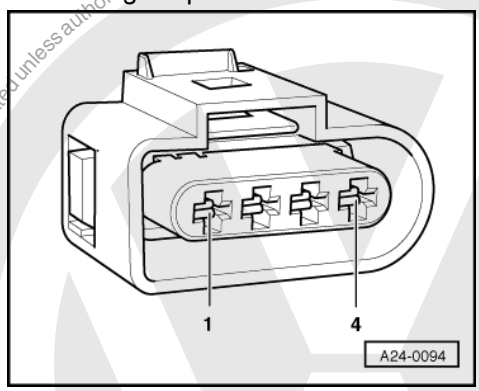


- -> Check wire between 4 pin connector contact 2 and relay plate for open circuit according to current flow diagram.
  Wire resistance: max. 1.5 ω
- Check wire between 4 pin connector contact 4 and earth for open circuit according to current flow diagram.
  Wire resistance: max. 1.5 ω

Checking activation

Warning!
During the following test do not touch the terminals of the ignition transformer or test cables.

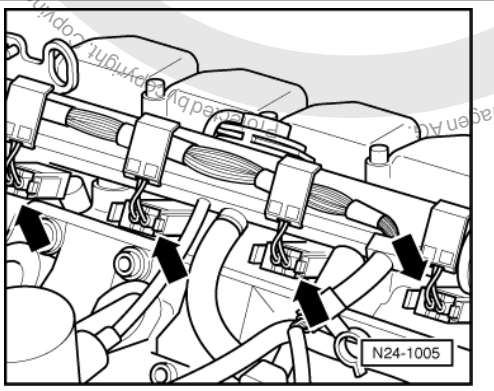


Copyright by Volkswagen AG. Volkswagen AG does not guarantee or accept any liability with respect to the correctness of information in this document. Copyright by Volkswagen AG. Copying for private or commercial purposes, in part or in whole, is not permitted unless authorised by Volkswagen AG.
satelettronica

- -> Pull plug -arrows- off all injectors.

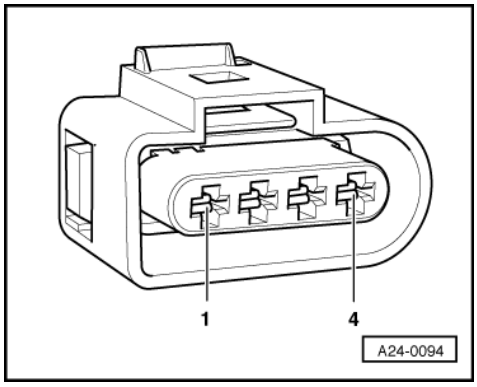


- -> Connect diode test lamp V.A.G 1527 with adapter cables from V.A.G 1594 to
  contacts 1 + 4 (ignition output 1),
  contacts 3 + 4 (ignition output 2)
  of disconnected connector.

- Operate starter and check the ignition signal from engine control unit.
  The LED must flicker
- Switch off ignition.

If the LED flickers and there is voltage between contacts 2 + 4:

- Renew ignition transformer (N152)
  => Page 148 , item 2 .

The LED does not flicker:

- Check wiring => Page 156

### Checking wiring

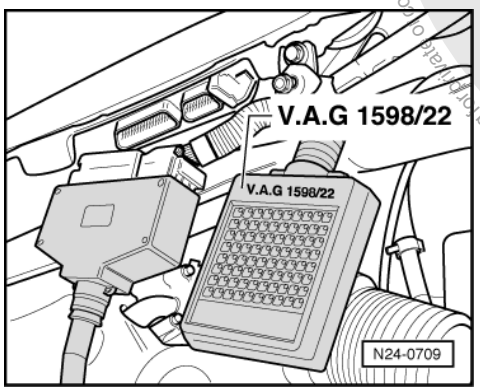


- Remove wiper arms and cowl panel:

=> Electrical system; Repair group 92; windscreen wiper system; removing and installing windscreen wiper system windscreen wiper system removing and installing windscreen wiper system

- -> Connect test box V.A.G 1598/22 to control unit wiring harness.

Protected by copyright. Copying for private or commercial purposes, in part or in whole, is not permitted unless authorised by Volkswagen AG. Volkswagen AG does not guarantee or accept any liability with respect to the correctness of information in this document. Copyright by Volkswagen AG.
satelettronica

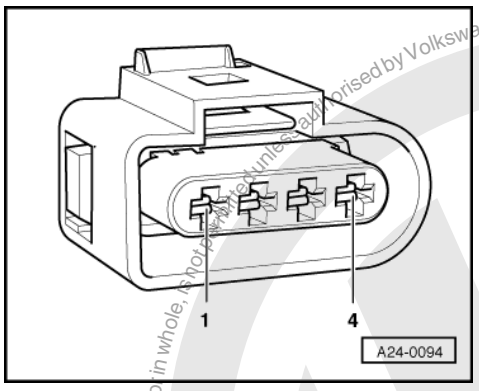


- -> Check wires between test box and 4-pin connector (connector to control unit) for open circuit using current flow diagram..
  Contact 1+socket 57
  Contact 3+socket 71
  Wire resistance: max. 1.5 ω
- Additionally check wires for short to one another.
  Specification: ∞ω

If no wiring fault is detected and voltage was present between contacts 2+4:

- Replace engine control unit
  => Page 133 .

**Checking secondary resistance**

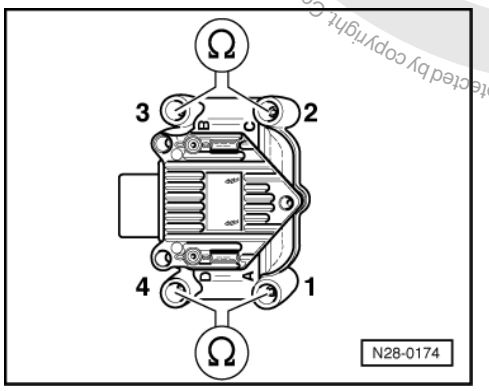


- -> Check the secondary winding on terminal 4 between
  Cyl. 1+Cyl. 4,
  Cyl. 2+Cyl. 3.
  Specification: 4.0... 6.0 kω (at 20 °C)

If the specifications are not attained:

- Renew ignition transformer (N152)
  => Page 148 , item 2 .

## 1.8 - Checking knock sensor

*Notes:*

- It is extremely important to keep to the tightening torque of 20 Nm to ensure the knock sensors perform perfectly.
- Only gold-plated contacts may be used when servicing the knock sensor connector contacts.

Protected by copyright. Copyright by Volkswagen AG.
Copyright by Volkswagen AG. Volkswagen AG does not guarantee or accept any liability with respect to the correctness of information in this document.
satelettronica

### Special tools, workshop equipment, testers, measuring instruments and auxiliary items required

- Test box V.A.G 1598/22
- Hand multimeter V.A.G 1526 or multimeter V.A.G 1715
- Adapter set V.A.G 1594
- Current flow diagram

### Test conditions

- Knock sensor fault recognised by self-diagnosis =>Page 9 , interrogating and erasing fault memory.

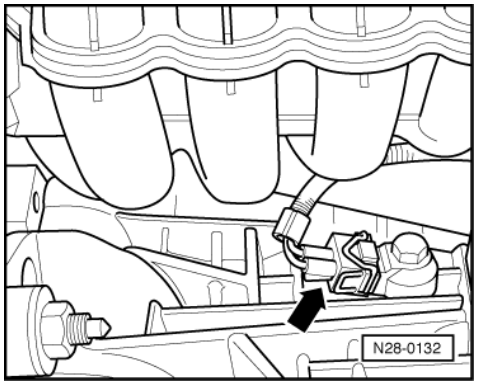


### Test sequence

- -> Pull 2 pin connector off knock sensor -arrow-.

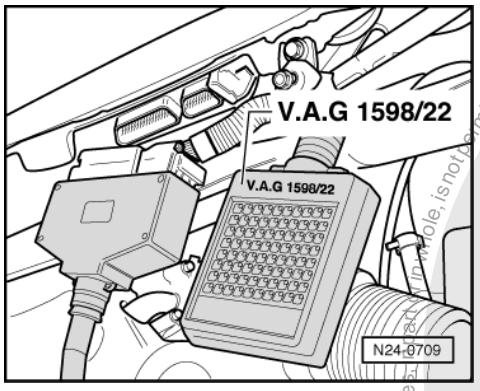


- Remove wiper arms and cowl panel:

=> Electrical system; Repair group 92; windscreen wiper system; removing and installing windscreen wiper system windscreen wiper system removing and installing windscreen wiper system

- -> Connect test box V.A.G 1598/22 to control unit wiring harness.

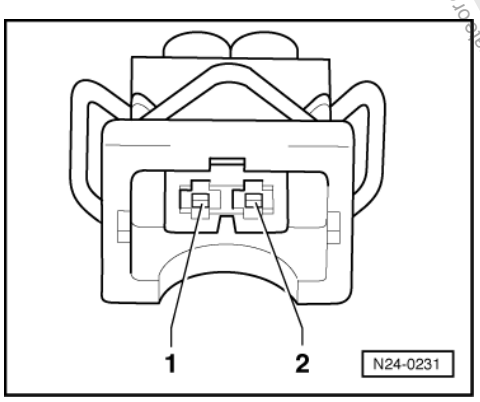


Protected by copyright. Copying for private or commercial purposes, in whole, is not permitted unless authorised by Volkswagen AG. Volkswagen AG does not guarantee or accept any liability with respect to the correctness of information in this document. Copyright by Volkswagen AG.
satelettronica

- -> Check wires between test box and 2-pin connector (connector to control unit) for open circuit using current flow diagram.
  Contact 1+socket 77
  Contact 2+socket 63
  Wire resistance: max. 1.5 ω
- Additionally check wires for short to one another.
  Specification: ∞ω

If no fault is detected in the wiring:

- Loosen knock sensor and tighten again to 20 Nm.
- Carry out test drive.

Observe the valid safety precautions when carrying out a test drive => Page 151 .

During the road test the following operating conditions must be fulfilled:
- The coolant temperature must exceed 80 °C .

- When the temperature is reached, the operating conditions
  Idling
  Part throttle
  Full throttle
  Overrun
  must be attained several times.
- At full throttle the speed must exceed 3500 rpm.

Again interrogate the control unit fault memory.

If the fault is still present:

- Replace knock sensor (G61) =>Page 149 , item 5 .

## 1.9 - Check misfiring recognition

**Only engines which conform to EU 4 standard (engine code AKP, AUC, AUD)**

**Special tools, workshop equipment, testers, measuring instruments and auxiliary items required**

◆ Fault reader V.A.G 1551 or vehicle system tester V.A.G 1552 with cable V.A.G 1551/3A

**Test sequence**

Connect fault reader V.A.G 1551 (V.A.G 1552). Start engine and select "Address word" 01 of engine control unit. When doing this the engine must be running at idling speed.
(Connecting fault reader and selecting engine control unit => Page 4 .)

-> Indicated on display:

```
Rapid data transfer      HELP
Select function XXX
```

- Press keys 0 and 8 for the function "Read measured value block" and confirm entry with Q key.

-> Indicated on display:

```
Read measured value block
Input display group number XXX
```

- Press keys 0, 1 and 4 for "Display group number 14" and confirm entry with Q key.

-> Indicated on display:
(1...4 = Display zones)

```
Read measured value block 14
     1     2     3     4
```

Protected by Copyright. Copying for private or commercial purposes, in part or in whole, is not permitted unless authorised by Volkswagen AG. Volkswagen AG does not guarantee or accept any liability with respect to the correctness of information in this document. Copyright by Volkswagen AG.

satelettronica

- Check the misfire recognition status in display zone 4.
  Specification: "activated"
- Check total misfires in display zone 3.
  Specification: 0

If the specifications are obtained:

- Press ⇒key.
- Press keys 0 and 6 for the "End output" function and confirm input with the Q key.
- Switch off ignition.

If the specifications are not attained:

- Change to display group 15 as follows:
  V.A.G 1551: Press key 3
  V.A.G 1552: Press key ↑

-> Indicated on display:
(1...4 = Display zones)

```
Read measured value block 15
     1      2      3      4
```

- Check the misfire recognition status in display zone 4.
  Specification: "activated"

- Check misfiring of Cyl. 1...Cyl. 3 in display zones 1...3.
  Specification: 0

If the specifications are not attained:

- Press ⇒key.
- Press keys 0 and 6 for the "End output" function and confirm input with the Q key.
- Switch off ignition.
- =>Page 40 , Evaluating display group 15 and display group 16.

If the specifications are obtained:

- Change to display group 16 as follows:
  V.A.G 1551: Press key 3
  V.A.G 1552: Press key ↑

-> Indicated on display:
(1 and 4 = Display zones)

```
Read measured value block 16
     1                4
```

- Check misfire recognition status in display zone 4.
  Specification: "activated"

- Check misfiring of Cyl. 4 in display zone 1
  Specification: 0
- Press ⇒key.
- Press keys 0 and 6 for the "End output" function and confirm input with the Q key.
- Switch off ignition.

If the specification is not attained:

- =>Page 40 , Evaluating display group 15 and display group 16.

satelettronica